RANK STRAND

MMS

MAINTENANCE HANDBOOK

MMS

MAINTENANCE HANDBOOK

(DRAWINGS)

RANK STRAND ELECTRIC

PO Box 70 Great West Road Brentford Middlesex TW8 9HR
Telephone 01-568 9222 Telex 24408 Cables Rankaudio Brentford

A DIVISION OF RANK AUDIO VISUAL LIMITED

DRAWINGS

(Note : Only those sections dealing with modules in the system supplied will be included in the handbook).

A SYSTEM DRAWINGS

A1 MMS Interconnections 8B13794
A2 Q Bus Timing 8A13897
A3 DMX 16 wire Bus 8C13898
A4 Mimic 14 wire Bus 8C13793
A20 MC Bus Timing 8B16894
A21 MC Bus Address Map 1M16640 Sheet 1
A22 MC Bus Address Map 1M16640 Sheet 2
A23 MC Bus Address Map 1M16640 Sheet 3

B POWER SUPPLIES

3B1 Power Distribution Unit Mk 2 (Master) 7C14772
3B2 Power Distribution Unit Mk2 (Slave B Bus) 7C14773
3B3 Power Distribution Unit Mk 2 (Dual) 7C14771
BB4 PSU Crate Wiring Diagram 7C12554
BB5 Standard Power Interconnections 7C14301
BB6 Belix PSU 5V 20A Module 6A H107B
BB7 Belix PSU 15V 10A Module 5B H111B
BB8 Belix PSU 5V 2A Module 2 H108B
BB9 Belix PSU 15V 1.3A Module 2 H109B
B20 Switching PSU Cabinet Mounted System Wiring 7A17712
B21 Switching PSU Desk Mounted System Wiring 7A17713
B22 Power Supply Cabinet Assembly 1A16974
B23 Switching PSU Main Supply Module 7C16634
B24 Switching PSU Stand By Supply Module 7C16635
B25 Switching PSU PDU Module 7C16633
B26 Switching PSU Delta PDU Module 7C17606
B27 MG Power Supply Handbook
B28 Belix PSU 5V 2A Module 2 H108B
B29 Belix PSU 15V 1.75A Module 2 H191B

C BUS TERMINATOR MODULES

C1 Bus Terminator Clock Generator and DMX Drive Unit 7B12959
C2 Bus Terminator and Mimic Drive Module 7B14129
C3 Ref 1317 Bus Terminator, Clock Generator and DMX Drive Card 6A 12397
C4 Ref 1322 Bus Terminator and Mimic Drive Card 6A 12531
C5 Ref 1336 Mimic Drive Patch Card 6B 12751

D MEMORY NUMBER SELECTOR (ADDRESS SELECTOR)

D1 Memory Number Selector Module 7A12749
D2 Ref 1313 Bus Connect Card 6B12337
D3 Ref 1310 Display Card 6C12334
D4 Ref 1319 Cue Select Card 6A12407
D5 Ref 1352 Auto Mod Card 6A13638
D6 Ref 1353 Clear Store Card 6A13641
D7 Ref 1354 All Record Card 6A13504
DD7 Ref 1511 All Record Card Mk 2 6A16785

E KEYBOARD CHANNEL CONTROL

E1 Channel Control Module 7A12944
E2 Ref 1313 Bus Connect Card 6B12337
E3 Ref 1310 Display Card 6C12334
E4 Ref 1335 Bus Communication Card 6A12960
E5 Ref 1331 Wheel Store Card 6A12733
E6 Ref 1334 Last Store Card 6A12737
E7 Ref 1329 Return Store Card 6A12600
E8 Ref 1330 Channel Select Card 6A12603

F @ KEYBOARD CHANNEL CONTROL

F1 @ Keyboard Channel Control Module 7A13091
F2 Ref 1313 Bus Connect Card 6B12337
F3 Ref 1310 Display Card 6C12334
F4 Ref 1335 Bus Communication Card 6A12960
F5 Ref 1331 Wheel Store Card 6A12733
F6 Ref 1334 Last Store Card 6A12737
F7 Ref 1329 Return Store Card 6A12600
F8 Ref 1368 At Program Card 6A12559
F9 Ref 1369 Channel Register Card 6A14188

G BUTTON CHANNEL CONTROL

G1 Button Channel Control Module 7A13871
G2 Ref 1313 Bus Connect Card 6B12337
G3 Ref 1310 Display Card 6C12334
G4 Ref 1335 Bus Communication Card 6A12960
G5 Ref 1331 Wheel Store Card 6A12733
G6 Ref 1334 Last Store Card 6A12737
G7 Ref 1329 Return Store Card 6A12600
G8 Ref 1364 Button Interface Card 6A13802
G9 Ref 1349 Channel Numbers Display Card 6B13796

H MANUAL PLAYBACK

HH1 Manual Playback Module Mk 2 7A13835
H2 Ref 1313 Bus Connect Card 6B12337
H3 Ref 1310 Display Card 6C12334
HH4 Ref 1341 Bus Communication Card 6A13401
HH5 Ref 1342 Cue Numbers and Contact Scan Card 6A13457
H6 Ref 1333 Playback Stores Card 6A12740
H7 Ref 1332 Fader Control Card 6B12743

J RATE PLAYBACK

J1 Rate Playback Module 7A13881
J2 Ref 1313 Bus Connect Card 6B12337
J3 Ref 1310 Display Card 6C12334
J4 Ref 1341 Bus Communication Card 6A13401
J5 Ref 1342 Cue Numbers and Contact Scan Card 6A13457
J6 Ref 1343 Fade and Output Card 6A13464
J7 Ref 1348 Rate and Meter Drive Card 6A13501
J8 Ref 1350 Light Meter Card 6A13507
J9 Ref 1355 LED Card 6B13510
J10 Ref 1346 Stage Store Card 6A13498
J11 Ref 1347 Preset and Delta Store Card 6A13495
J12 Ref 1344 Multiplier Card 6A13460
J13 Ref 1345 Not Recorded Card 6A13492

K LAMP MIMIC

K1 Mimic Module 7B13513
K2 Ref 1318 Mimic Motherboard 6A12403
K3 Ref 1339 Single Button Mimic Routing Card 6C13260
K4 Ref 1340 Four Button Mimic Routing Card 6C13398
K5 Ref 1314 Twelve Way Lamp Card 6A12340
K6 Ref 1366 Twelve Way Remote Mimic Card 6A13877

L BUTTON MIMIC

L1 Mimic Module 7B13513
L2 Ref 1318 Mimic Motherboard 6A12403
L3 Ref 1339 Single Button Mimic Routing Card 6C13260
L4 Ref 1340 Four Button Mimic Routing Card 6C13398
L5 Ref 1315 Twelve Way Switch Card 6A12394
L6 Ref 1366 Twelve Way Remote Mimic Card 6A13877

M CORE STORE

M1 Core Store Module 7A12327
M2 Ref 1313 Bus Connect Card 6B12337
M3 Ref 1310 Display Card 6C12334
M4 Ref 1311 Bus Communication Card 6A12324
M5 Ref 1312 Core Address Card 6A12328

N BACK UP MASTERS

N1 Back Up Masters Module Standard 7B13468
N2 Back Up Masters Module - One Flasher 7B13467
N3 Back Up Masters Module - Two Flashers 7B12555
NN4 Ref 1327 Back Up Card Mk 2 6A12595
N5 Back Up Masters Module - Two Flashers and Switches 7B14764

P PIN PATCH

PP1 Pin Patch Module 3 Deck 7A14139
P2 Ref 1324 DMX Buffer Card 6A12534
P3 Ref 1326 DMX Master Card 6B12592
PP4 Ref 1325 DMX Channel Card Mk 2 6A12537

Q RECORDED SEQUENCE MEMORY NUMBER SELECTOR

Q1 Recorded Sequence Memory No. Selector Module Wiring 7A16714
Q2 Ref 1313 Bus Connect Card 6B12337
Q3 Ref 1310 Display Card 6C12334
Q4 Ref 1503 Bus Communication Card 6A16648
Q5 Ref 1504 Circuit Diagram 6A16706
Q6
Q7 Ref 1370 Variable Mem. No. A/Mod Card 6A13263
Q8 Ref 1353 Clear Store Card 6A13641
Q9 Ref 1511 All Record Card Mk 2 6A16785

R TAPE

R1 Tape Module Wiring Diagram 7A15764
R2 Ref 1313 Bus Connect Card 6B12337
R3 Ref 1310 Display Card 6C12334
R4 Ref 1394 Bus Communication Card 6A15583
R5 Ref 1392 MC Contact and Cue Nos. Card 6A15688
R6 Ref 1393 MC/Q Channel Store Card 6A15691
R7 Ref 1395 MC (Processor) Card 6A15697 Sheet 1
R8 Ref 1395 MC (Memory) Card 6A15697 Sheet 2
R9
R10 Ref 1390 Command Card 6A14828
R11 Ref 1389 Motor Control Card 6A15587
R12 Ref 1391 Write Register Card 6A15580
R13 Ref 1388 Read Register Card 6A15573
R14 P&G 2 Track Read Electronics Type B 6A16703
R15 MC Peripheral Address List 1M16641

S STALLS MODULE

S1 Stalls Module Wiring 7A16782
S2 Ref 1313 Bus Connect Card 6B12337
S4 Ref 1394 MC/Q Bus Communication Card 6A15583
S5 Ref 1392 MC Contact And Cue Numbers Card 6A15688
S7 Ref 1395 MC (Processor) Card 6A15697 Sheet 1
S8 Ref 1395 MC (Memory) Card 6A15697 Sheet 2
S9 Ref 1509 MC Stalls I/F and O/P Card 6A16777
S10 Ref 1505 MC Preset and Return Store Card 6A16716
S11 Ref 1507 MC Δ Store 6A16730
S12 Ref 1508 MC Multiplier Card 6A16774
S13 Ref 1506 MC Stage Store Card 6A16727
S15 MC Peripheral Address List 1M16895
S20 Briefcase Terminal Control Panel Wiring 7B17703
S21 Extension Cable and Box Wiring 7C17810
S25 Ref 1510 Pt.1 Briefcase Terminal Main PCB Circuit 6A16721
S26 Ref 1510 Pt.2 Briefcase Terminal Display PCB Circuit 6A16724
S27 Ref 1512 Briefcase Terminal PSU 6B16784

T STANDARD TEST BOX

T1 Test Box Wiring Diagram 7A13258
T2-T7 Ref 1338 Test Box Card 6B13255
T2 Bus Termination and Lamp Drive
T3 Single Data, DMX and Mimic Drive
T4 Clock and Frame Sync
T5 Channel Select
T6 Cue Select
T7 Commands
T8 Bus Switches and Test Points 7B13259
T9 Socket Positions 8B14289
T10 Ref 1320 Simple Bus Terminator Card 6B12519
T11 Ref 1351 Channel Data Card 6C14157
T12 Ref 1398 MC Test Program Card 6B16517
T13 Ref 1513 MC Bus Test Card 6A16795

DWG. Nº 8B13794 | ISSUE A

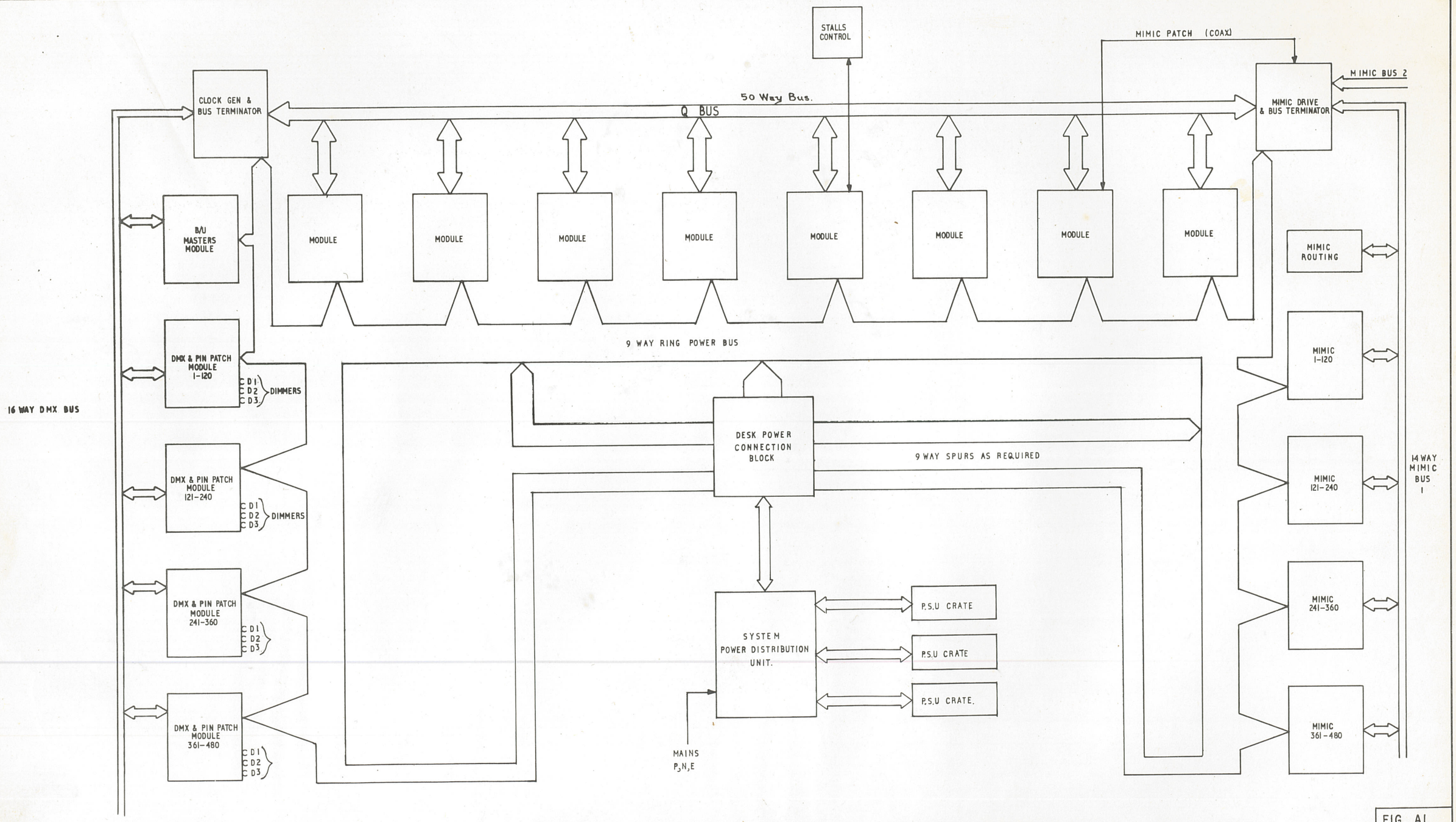

FIG. A1.

RANK STRAND ELECTRIC
PO Box 70 Great West Road Brentford Middlesex TW8 9HR
Telephone 01-568 9222 Telex 24408
A DIVISION OF
RANK AUDIO VISUAL LIMITED

DIMENSIONS IN INCHES/MILLIMETRES
THIRD ANGLE PROJECTION

TOLERANCES		SCALE		DATE
IMPERIAL	METRIC	DRAWN	T.T.C.	15-9-73
FRACTION ± 1/64"	1 DEC PLACE ± 0·4 mm	CHECKED	D.R.B.	11/6/74
DECIMAL ± ·005"	2 DEC PLACE ± 0·1 mm	APPROVED	D.R.B.	11/6/74
ANGULAR ± 0·25°		MATERIAL :-		
UNLESS OTHERWISE STATED				
USED ON :-		FINISH :-		

TITLE :-

MMS SYSTEM INTERCONNECTIONS

ISSUE A | DWG. Nº 8B13794

DWG. Nº 8A13697 | ISSUE A B

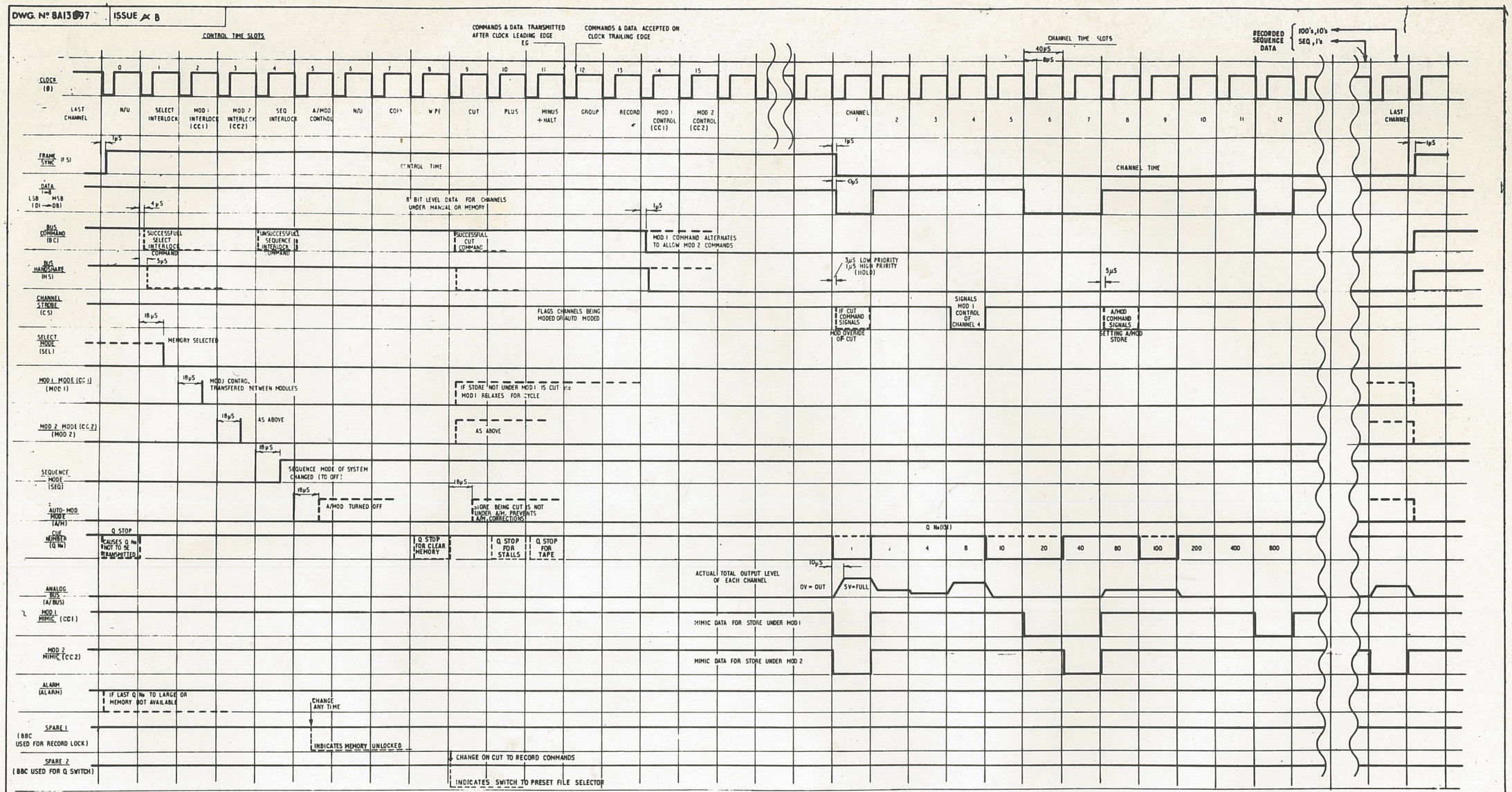

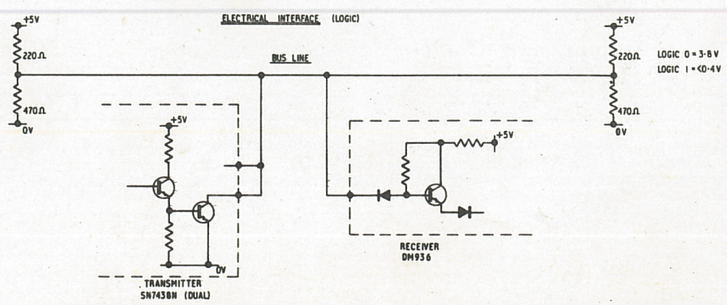

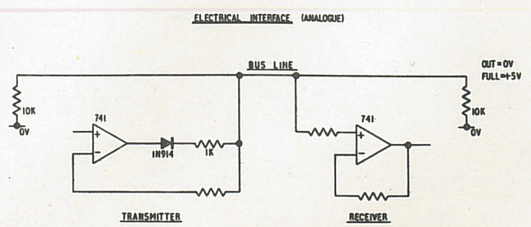

FIG A2

BELL C.Nº
Details of Address See Note, 4 letter 6 stroke Pet Shall I think Rue Bac. 6 Some of Gen. 10-74 Mod.

RANK STRAND ELECTRIC
PO Box 70 Great West Road Brentford Middlesex TW8 9HR
Telephone 01-568 9222 Telex 24408
A DIVISION OF
RANK AUDIO VISUAL LIMITED

DIMENSIONS IN INCHES/MILLIMETRES
THIRD ANGLE PROJECTION

TOLERANCES		SCALE		DATE
IMPERIAL	METRIC	DRAWN	TYC	7-1-74
FRACTION ± 1/64"	1 DEC PLACE ± 0·4 mm	CHECKED	[illegible]	21/1/74
DECIMAL ± .005"	2 DEC PLACE ± 0·1 mm	APPROVED	[illegible]	14/2/74
ANGULAR ± 0·25°		MATERIAL:-		
UNLESS OTHERWISE STATED				
USED ON:-		FINISH:-		

TITLE:- MMS Q BUS TIMING

ISSUE A B | DWG. Nº 8A13697

DWG. Nº 8C13898	ISSUE A

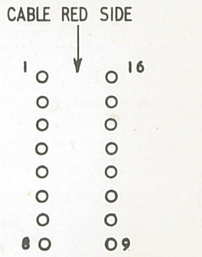

16 PIN D.I.L SOCKET
TOP VIEW PIN
IDENTIFICATION

PIN ARRANGEMENT	
PIN	FUNCTION
1	MASTER A
2	MASTER B
3	DMX ANALOG
4	DMX FS
5	DMX Ø
6	MASTER C
7	MASTER D
8	MASTER E
9	MASTER F
10	MASTER G
11	DMX 0V
12	DMX $\overline{Ø}$
13	DMX $\overline{FS}$
14	MASTER H
15	MASTER K
16	MASTER L

INTERFACE FOR MASTERS A-L

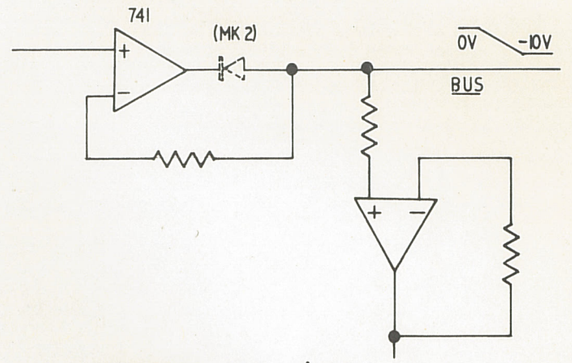

INTERFACE FOR, Ø FS

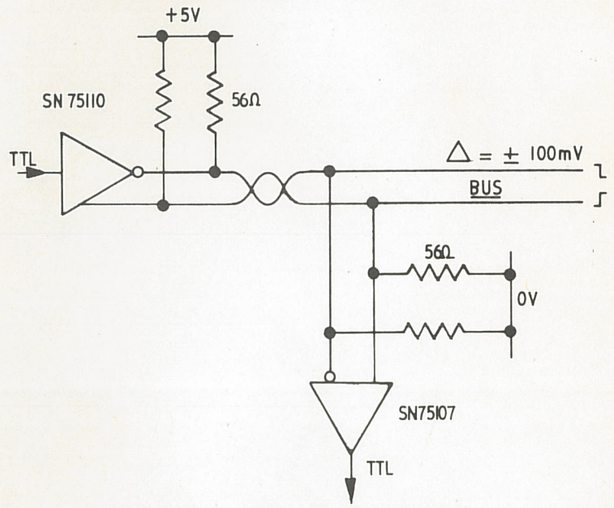

INTERFACE FOR DMX ANALOG

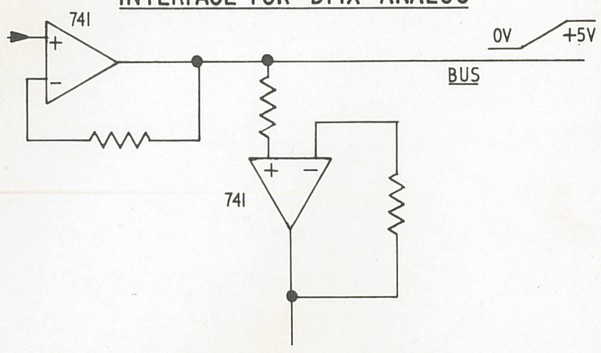

FIG A3

REV. 1. C.Nº	RANK STRAND ELECTRIC PO Box 70 Great West Road Brentford Middlesex TW8 9HR Telephone 01-568 9222 Telex 24408 A DIVISION OF RANK AUDIO VISUAL LIMITED	TOLERANCES IMPERIAL / METRIC FRACTION ± 1/64" / 1 DEC PLACE ± 0·4 mm DECIMAL ± ·005" / 2 DEC PLACE ± 0·1 mm ANGULAR ± 0·25° UNLESS OTHERWISE STATED	SCALE / DRAWN / CHECKED / APPROVED DATE: 11/6/74 / 11/6/74 / 11/6/74 MATERIAL :-	TITLE :- MMS DMX 16 WIRE BUS		
	DIMENSIONS IN INCHES/MILLIMETRES THIRD ANGLE PROJECTION	USED ON :-	FINISH :-	ISSUE A	DWG. Nº 8C13898	

CWG & S.

DWG. Nº 8C13793	ISSUE A

CABLE RED SIDE

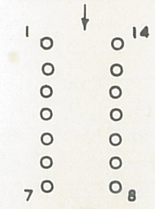

14 PIN D.I.L SOCKET
TOP VIEW PIN
IDENTIFICATION

PIN ARRANGEMENT	
PIN	FUNCTION
1	0V
2	CS0 ⊓_
3	DATA ⊓_
4	FS ⊓_
5	Ø ⊓_
6	C1 ⊓_
7	+5V
8	0V
9	0V
10	$\overline{Ø}$ _⊓_
11	$\overline{FS}$ _⊓_
12	$\overline{DATA}$ _⊓_
13	C2 ⊓_
14	+5V

INTERFACE FOR Ø, FS, DATA

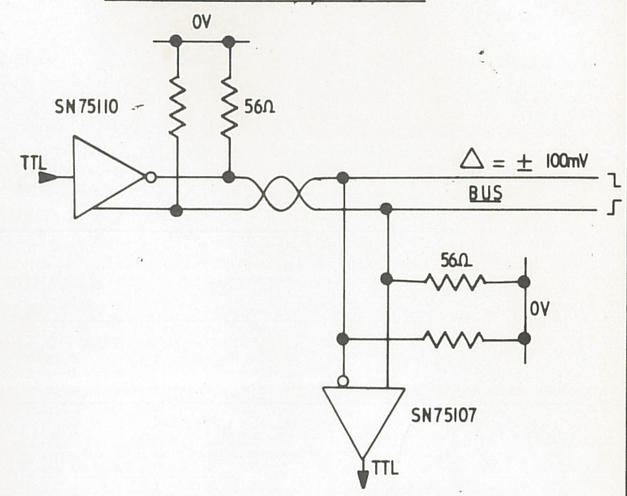

INTERFACE FOR C1, C2

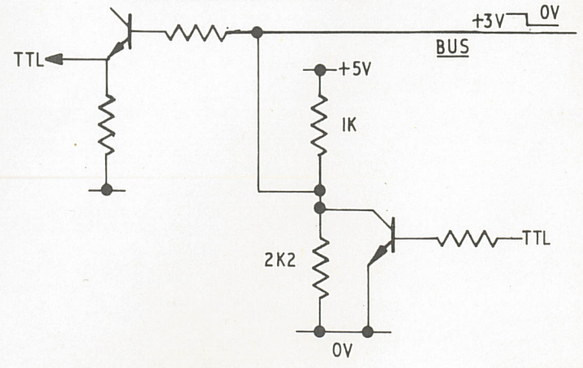

FIG. A4

REV.1. C.Nº	RANK STRAND ELECTRIC PO Box 70 Great West Road Brentford Middlesex TW8 9HR Telephone 01-568 9222 Telex 24408 A DIVISION OF RANK AUDIO VISUAL LIMITED	TOLERANCES IMPERIAL / METRIC FRACTION ± 1/64" / 1 DEC PLACE ± 0·4 mm DECIMAL ± ·005" / 2 DEC PLACE ± 0·1 mm ANGULAR ± 0·25° UNLESS OTHERWISE STATED USED ON :-	SCALE DRAWN — DATE 11/6/74 CHECKED DRB 11/6/74 APPROVED DRB 11/6/74 MATERIAL :- FINISH :-	TITLE :- MMS MIMIC 14 WIRE BUS ISSUE A / DWG. Nº 8C13793

DIMENSIONS IN INCHES/MILLIMETRES
THIRD ANGLE PROJECTION

CWG & S.

DWG. Nº 8B16894	ISSUE A

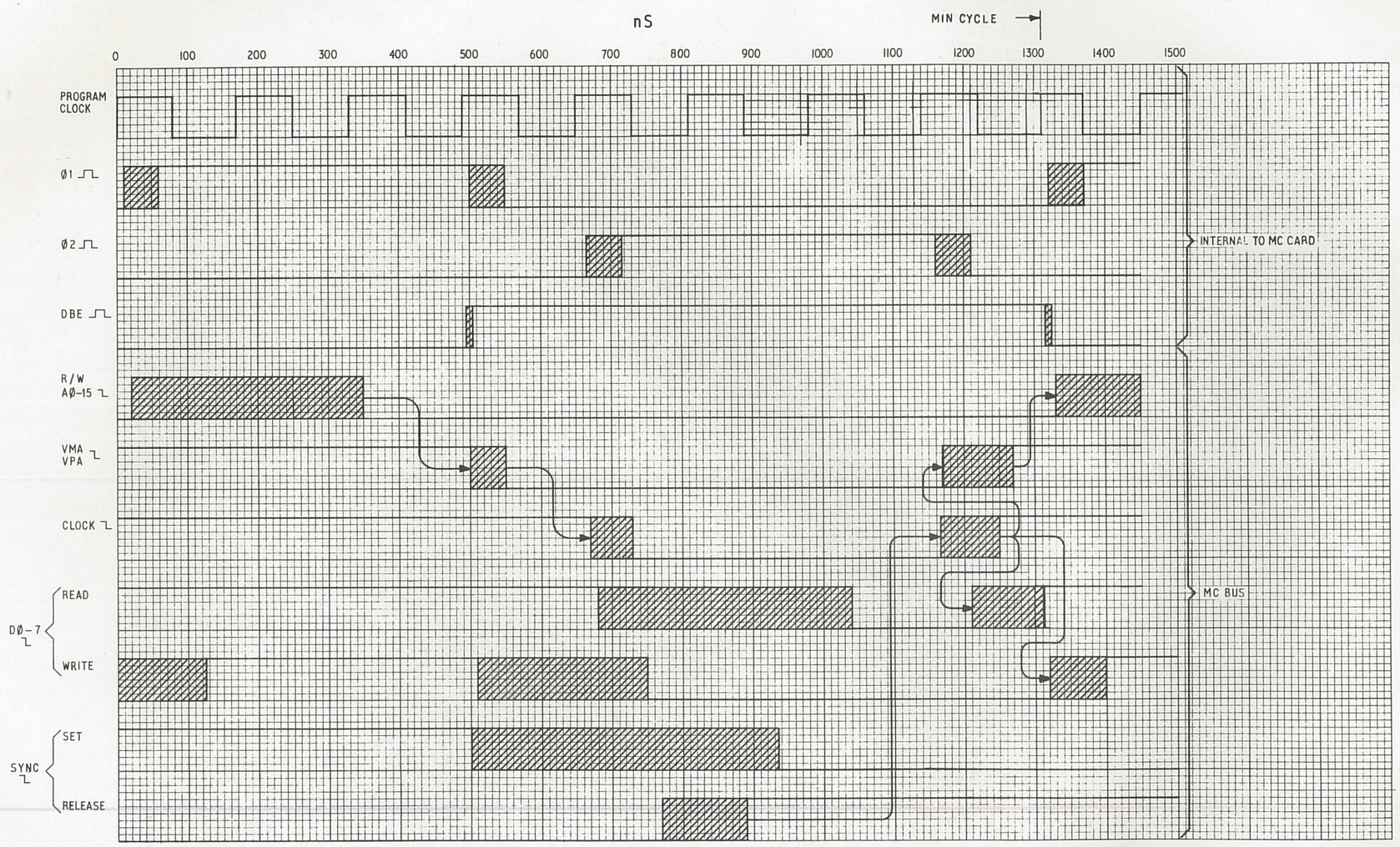

FIG A20

REV.1 C.Nº

RANK STRAND ELECTRIC
PO Box 70 Great West Road Brentford Middlesex TW8 9HR
Telephone 01-568 9222 Telex 24408
A DIVISION OF
RANK AUDIO VISUAL LIMITED

DIMENSIONS IN INCHES/MILLIMETRES
THIRD ANGLE PROJECTION

TOLERANCES		SCALE		DATE
IMPERIAL	METRIC	DRAWN	C.COOPER	6-4-76
FRACTION ± 1/64"	1 DEC PLACE ± 0·4 mm	CHECKED		25-8-76
DECIMAL ± ·003"	2 DEC PLACE ± 0·1 mm	APPROVED		25-8-76
ANGULAR ± 0·25°		MATERIAL:-		
UNLESS OTHERWISE STATED				
USED ON:-		FINISH:-		

TITLE:-
MC BUS TIMING DIAGRAM

ISSUE A | DWG. Nº 8B16894

DWG. Nº IM16640 SHT 1 OF 3 | ISSUE B

ADDRESS	TAG	USE
FFFF	TPROMH	LSB } RESET VECTOR
FFFE		MSB }
FFFD		LSB } NMI VECTOR
FFFC		MSB }
FFFB		LSB } SWI VECTOR
FFFA		MSB }
FFF9		LSB } IRQ VECTOR
FFF8		MSB }
		} MC CARD PROM AREA REF 1395
F4ØØ	TPROML	
F3FF		} NOT USED
F ØØØ		
EFFF		} PROGRAM MEMORY EXTENSION AREA REF 1501

DWG. Nº IM16640 SHT 2 OF 3 | ISSUE B

ADDRESS	TAG	USE	
27FF		CHANNEL 512 MASTER ASSIGN	MMS STALLS CHANNEL △ STORE
24Ø1		CHANNEL 1 MASTER ASSIGN	
24ØØ		CHANNEL 1 △ LEVEL	
23FF		UNUSED	REF 1507
2Ø1Ø			
2ØØF		MASTER 3 DOWN SIGN & CONTROL	MMS STALLS FADE MASTER STORE
2ØØ3		MASTER Ø UP SIGN & CONTROL	
2ØØ2		MASTER Ø UP LEVEL	
2ØØ1		MASTER Ø DOWN SIGN & CONTROL	
2ØØØ		MASTER Ø DOWN LEVEL	
		1FFF TO 1FØØ DEDICATED PERIPHERAL DEVICE AREA	
1FFF			NOT USED
1FFE			
1FFD	THASCR	Q BUS SLAVE COMMAND REG	REF 1394
1FFC	THAMCR	Q BUS MASTER COMMAND REG	
1FFB		RESERVED FOR 2nd MC-Q BUS STORE	REF 1393
1FFA	THATSS	MC-Q BUS CHANNEL STORE STATUS REG	
1FF9			NOT USED
1FF8			
1FF7			
1FF6			
1FF5			
1FF4			
1FF3	THATDW	TAPE WRITE DATE REGISTER	REF 1390
1FF2	THATDR	TAPE READ DATA REGISTER	
1FF1	THATC	TAPE COMMAND REGISTER	
1FFØ	THATS	TAPE STATUS REGISTER	
1FEF	THAQBC	Q Nº COMMAND & STATUS REG	REF 1392
1FEE		DO NOT USE	
1FED		Q BUS Q Nº H & TENS	

ADDRESS	TAG	USE	
1FEC	THAQBN	Q BUS Q Nº UNITS	REF 1392
1FEB		DO NOT USE	
1FEA		DO NOT USE	
1FE9		Q Nº DISPLAY H & TENS	
1FE8	THAQND	Q Nº DISPLAY UNITS	
1FE7		B THUMBWHEELS H & TENS	
1FE6		B THUMBWHEELS UNITS	
1FE5		A THUMBWHEELS H & TENS	
1FE4	THASST	A THUMBWHEELS UNITS	
1FE3		DO NOT USE	
1FE2		GENERAL CONTACTS & MIMICS	
1FE1			
1FEØ	THACM		
1FDF			NOT USED
1F8Ø			

FIG A22

C.Nº

REV.1.

RANK STRAND ELECTRIC
PO Box 70 Great West Road Brentford Middlesex TW8 9HR
Telephone 01-568 9222 Telex 24408
A DIVISION OF
RANK AUDIO VISUAL LIMITED

DIMENSIONS IN INCHES/MILLIMETRES
THIRD ANGLE PROJECTION

TOLERANCES	
IMPERIAL	METRIC
FRACTION ± 1/64"	1 DEC PLACE ± 0·4 mm
DECIMAL ± 005"	2 DEC PLACE ± 0·1 mm
ANGULAR ± 0·25°	
UNLESS OTHERWISE STATED	

USED ON :-

SCALE		DATE
DRAWN	J. KENNY.	7·1·76
CHECKED	[signature]	25·8·76
APPROVED	[signature]	28-8-76

MATERIAL :-

FINISH :-

TITLE :-
M.M.S
MC BUS ADDRESS MAP

ISSUE B | DWG. Nº IM16640 SHT 2 OF 3

CWG & S

DWG. Nº 1M16640 SHT 3 OF 3 | ISSUE B

ADDRESS	TAG	USE
1F7F		NOT USED
1F1Ø		
1FØF		MMS STALLS RETURN COMMAND REGISTER REF 1505
1FØE		MMS STALLS O/P CONTROL REGISTER REF 1509
1FØD		MC- MASTER STORE CONTROL REGISTER REF 1507
1FØC		MC- Δ STORE COMMAND REGISTER REF 1507
1FØB		RESERVED FOR 2nd. MMS STALLS ACIA INTERFACE
1FØA		
1FØ9		DATA — MMS STALLS ACIA INTERFACE REF 1509
1FØ8		STATUS & CONTROL — MMS STALLS ACIA INTERFACE REF 1509
1FØ7		NOT USED
1FØ6		
1FØ5		
1FØ4		
1FØ3		RESERVED FOR 2nd ACIA TTY INTERFACE — REF 1501
1FØ2		
1FØ1		DATA — ACIA TTY INTERFACE REF 1501
1FØØ		STATUS & CONTROL — ACIA TTY INTERFACE REF 1501

ADDRESS	TAG	USE		
1EFF				UNUSED PERIPHERAL BLOCK AREA
18ØØ				
17FF				RESERVED FOR 2nd MC-Q BUS INTERFACE STORE
14ØØ				
13FF	TQRAMH	CHANNEL 512	PAGE 2	MC-Q BUS INTERFACE STORE (MMS TAPE) — REF 1393
12ØØ	TQRAMM	CHANNEL 1		
11FF		CHANNEL 512	PAGE 1	
1ØØØ	TQRAML	CHANNEL 1		
ØFFF				NOT USED
Ø6ØØ				
Ø5FF				RAM EXPANSION AREA REF 1501
Ø2ØØ				
Ø1FF	TFRAMH	= HIGHEST ADDRESS FOR PARTICULAR PROGRAM.		MC CARD RAM AREA REF 1395
Ø1ØØ				
ØØFF			"DIRECT" MODE ADDRESSED RAM.	
ØØØØ	TFRAML			

FIG A23

C.N.º

REV.1.

RANK STRAND ELECTRIC
PO Box 70 Great West Road Brentford Middlesex TW8 9HR
Telephone 01-568 9222 Telex 24408
A DIVISION OF
RANK AUDIO VISUAL LIMITED

DIMENSIONS IN INCHES/MILLIMETRES
THIRD ANGLE PROJECTION

TOLERANCES	
IMPERIAL	METRIC
FRACTION ± 1/64"	1 DEC PLACE ± 0·4 mm
DECIMAL ± ·005"	2 DEC PLACE ± 0·1 mm
ANGULAR ± 0·25°	
UNLESS OTHERWISE STATED	

USED ON :-

		DATE
SCALE		
DRAWN	J KENNY	7-1-76
CHECKED		25-8-76
APPROVED		25-8-76

MATERIAL :-

FINISH :-

TITLE :-

MMS
MC BUS ADDRESS MAP.

ISSUE B

DWG. Nº 1M16640 SHT 3 OF 3

CWG & S

DWG. Nº 7C 14772 | ISSUE B

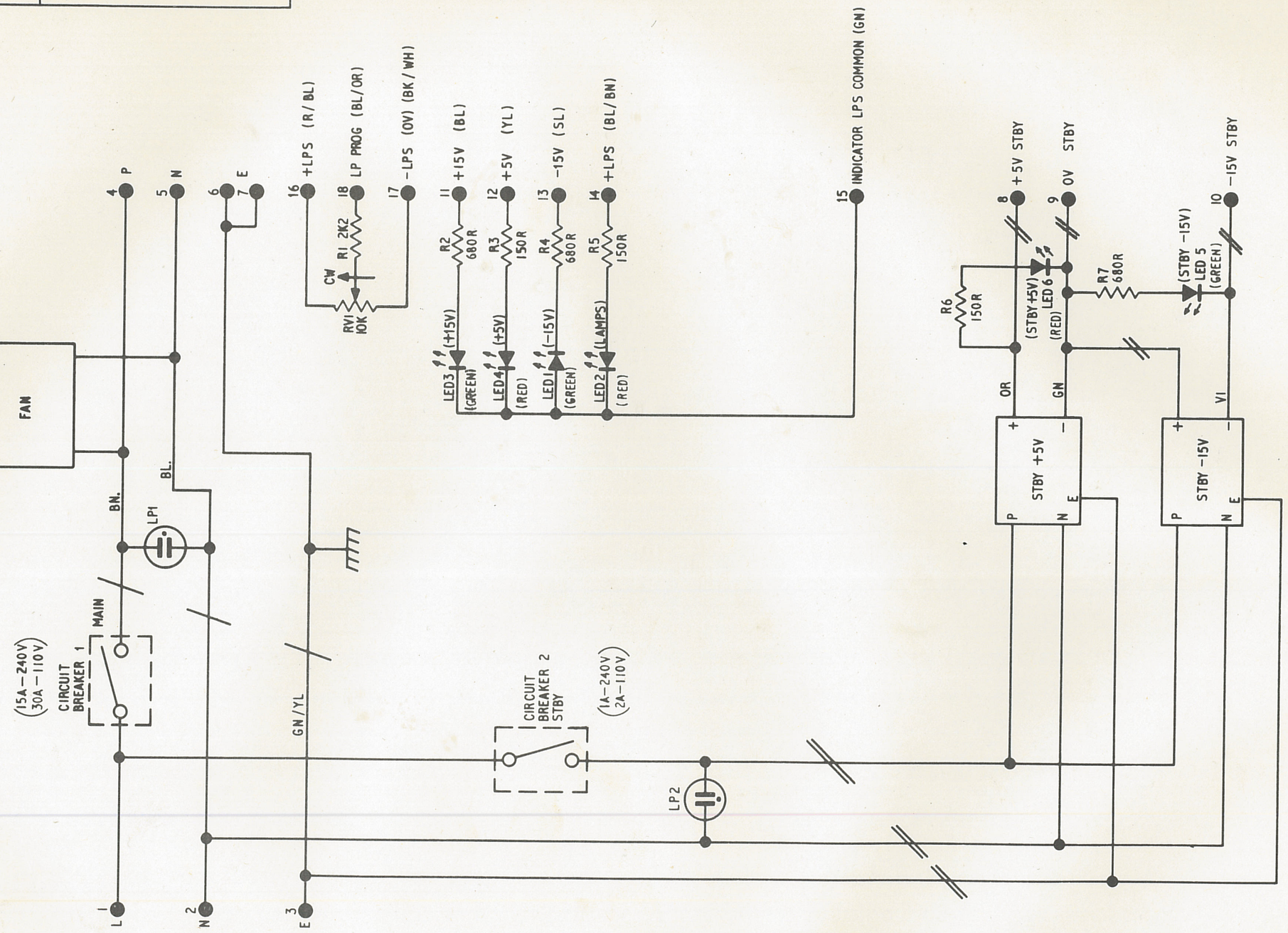

RESISTORS & LEDs MOUNTED ON PCB 413 PRIOR TO FITTING ON FRONT PANEL.

WIRE SIZE
110/0076
40/0076
ALL OTHERS 14/0076

FIG. 3B1

REV.1. C.Nº E2101
R3,4,7, Previously 270Ω
R3,5,6, " 68Ω.
LED Colours Added.
7-4-75

RANK STRAND ELECTRIC
PO Box 70 Great West Road Brentford Middlesex TW8 9HR
Telephone 01-568 9222 Telex 24408
A DIVISION OF
RANK AUDIO VISUAL LIMITED

DIMENSIONS IN INCHES/MILLIMETRES
THIRD ANGLE PROJECTION

TOLERANCES	
IMPERIAL	METRIC
FRACTION ± 1/64"	1 DEC PLACE ± 0·4 mm
DECIMAL ± ·005"	2 DEC PLACE ± 0·1 mm
ANGULAR ± 0·25°	
UNLESS OTHERWISE STATED	

USED ON :-

SCALE		DATE
DRAWN	C. COOPER	17_12_74
CHECKED		23.2.75
APPROVED	VHG	23/12/74

MATERIAL :-

FINISH :- MMS

TITLE :-
MMS POWER DISTRIBUTION UNIT MK II
(MASTER) WIRING DIAGRAM

ISSUE B | DWG. Nº 7C14772

CWG & S

DWG. Nº 7C14773	ISSUE B

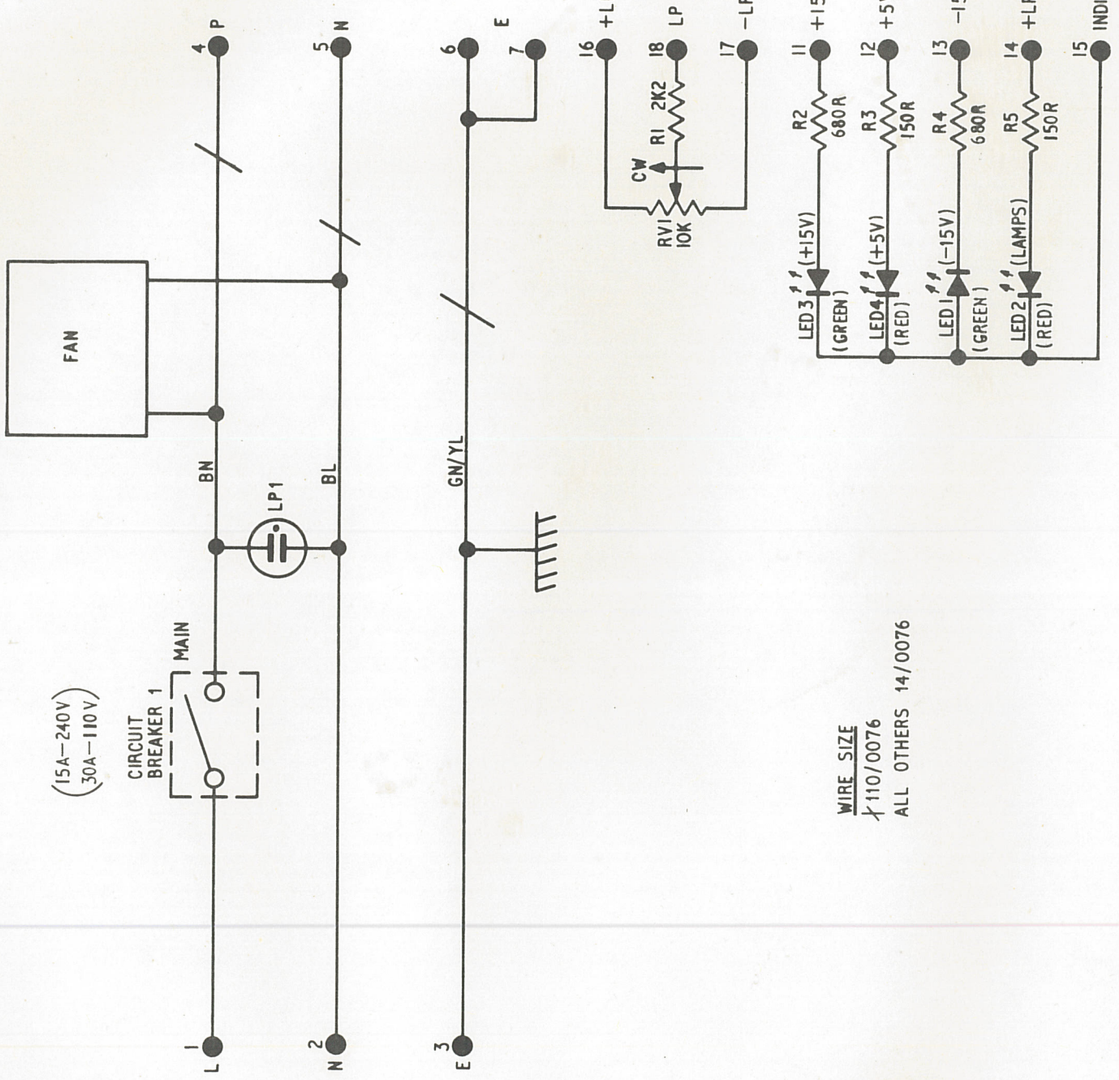

RESISTORS & LEDs MOUNTED ON PCB 413
PRIOR TO FITTING ON FRONT PANEL.

WIRE SIZE
1.110/0076
ALL OTHERS 14/0076

FIG 3B2

REV.1. C.Nº E2101
R2,4, Previously 270Ω
R3,5 " 68Ω.
LED Colours Added.
Rohs 7-4-75

RANK STRAND ELECTRIC
PO Box 70 Great West Road Brentford Middlesex TW8 9HR
Telephone 01-568 9222 Telex 24408
A DIVISION OF
RANK AUDIO VISUAL LIMITED

DIMENSIONS IN INCHES/MILLIMETRES
THIRD ANGLE PROJECTION

TOLERANCES	
IMPERIAL	METRIC
FRACTION ± 1/64"	1 DEC PLACE ± 0·4 mm
DECIMAL ±·005"	2 DEC PLACE ± 0·1 mm
ANGULAR ± 0·25°	
UNLESS OTHERWISE STATED	

USED ON :-

SCALE		DATE
DRAWN	C.COOPER	17-12-74
CHECKED		03.2.75
APPROVED	VTG	23/12/74

MATERIAL :-

FINISH :- MMS

TITLE :-
MMS STANDARD POWER DISTRIBUTION UNIT MK.II
(SLAVE B BUS) WIRING DIAGRAM

ISSUE B

DWG. Nº 7C14773

CWG & S

DWG. Nº 7C 14771	ISSUE B

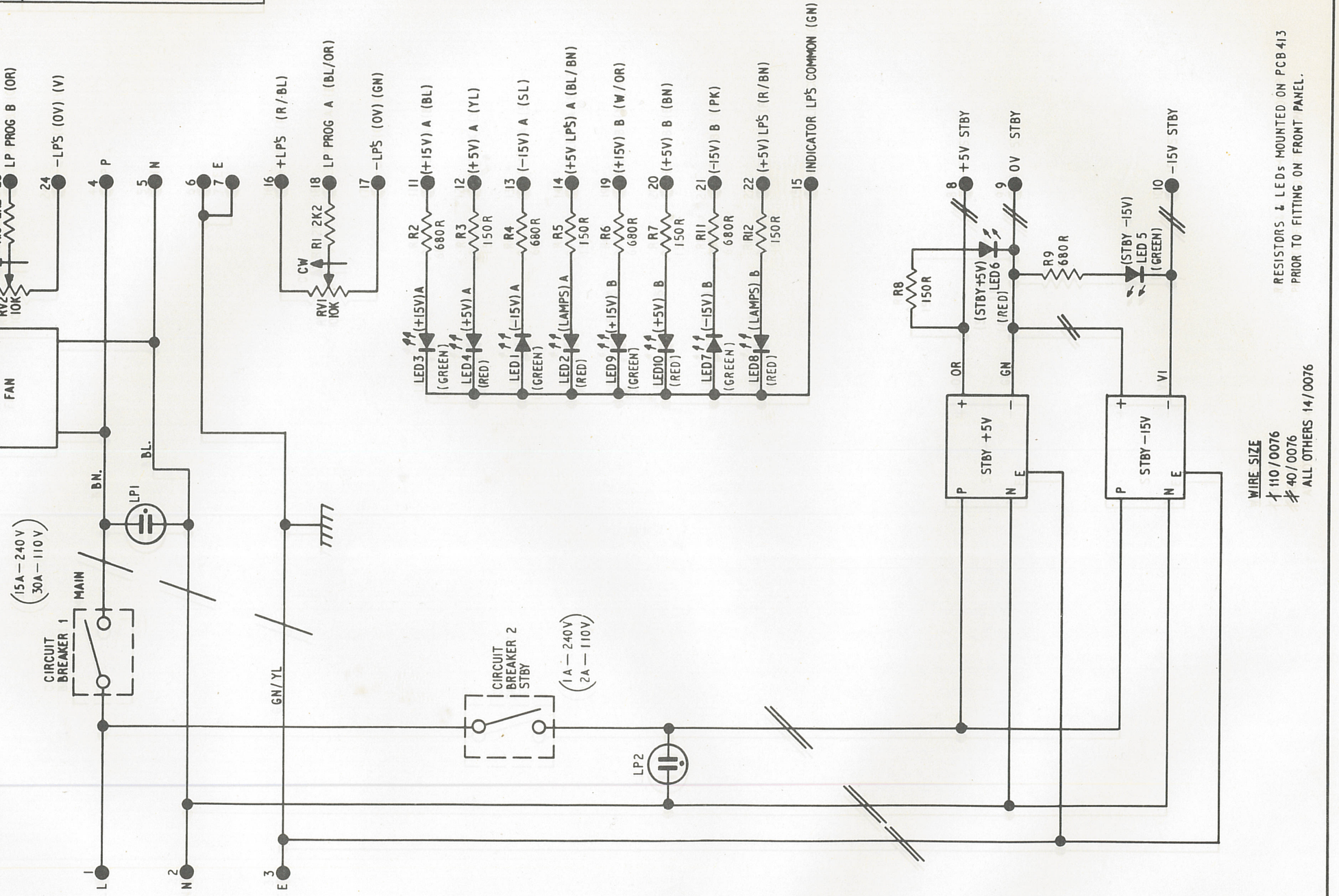

RESISTORS & LEDs MOUNTED ON PCB 413 PRIOR TO FITTING ON FRONT PANEL.

WIRE SIZE
1/ 110/0076
4/ 40/0076
ALL OTHERS 14/0076

FIG. 3B3

REV.	C.Nº	
1.	E2101	R2,4,6,9,11, Previously 270Ω 2W5. R3,5,7,8,12, Previously 68Ω 2W5. LED Colours Added. 7-4-75

CWG & S

RANK STRAND ELECTRIC
PO Box 70 Great West Road Brentford Middlesex TW8 9HR
Telephone 01-568 9222 Telex 24408
A DIVISION OF
RANK AUDIO VISUAL LIMITED

DIMENSIONS IN INCHES/MILLIMETRES
THIRD ANGLE PROJECTION

TOLERANCES	
IMPERIAL	METRIC
FRACTION ± 1/64"	1 DEC PLACE ± 0·4mm
DECIMAL ±·005"	2 DEC PLACE ± 0·1mm
ANGULAR ± 0·25°	
UNLESS OTHERWISE STATED	

USED ON :-

SCALE		DATE
DRAWN	C. COOPER	17_12_74
CHECKED	[illegible]	23.12.74
APPROVED	V H C	23/12/74

MATERIAL :-

FINISH :- MMS

TITLE :-
MMS POWER DISTRIBUTION UNIT MK.II
(DUAL) WIRING DIAGRAM

ISSUE B

DWG. Nº 7C14771

DWG. Nº 7C12554	ISSUE AB

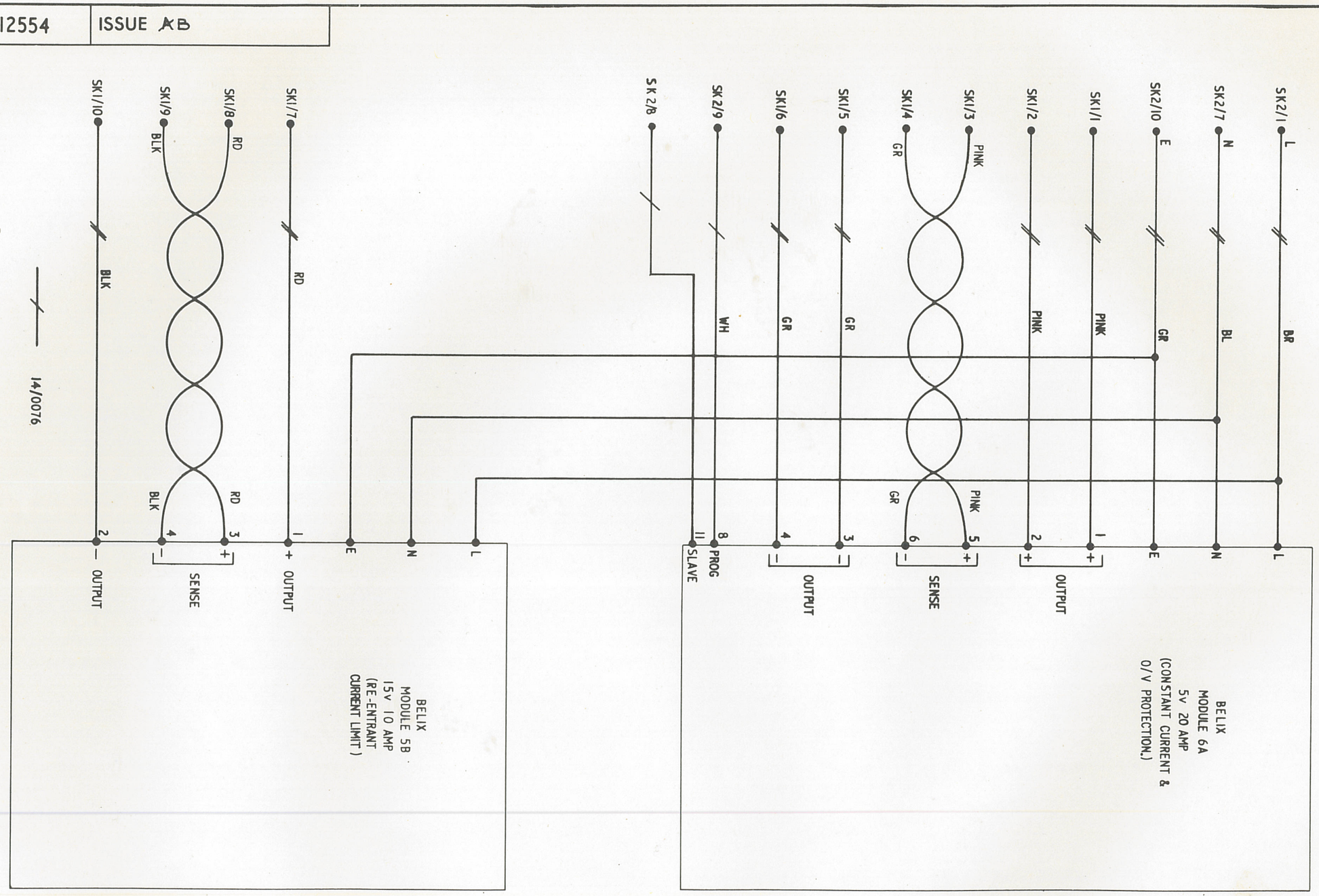

14/0076

70/0076

14/0076 TWISTED

FIG.B2,BB4

REV.1. C.N°E1770
WIRE FROM MODULE 6A PIN 11 TO SK 2/8 ADDED. 20.8.74 M.H.

RANK STRAND ELECTRIC
PO Box 70 Great West Road Brentford Middlesex TW8 9HR
Telephone 01-568 9222 Telex 24408
A DIVISION OF
RANK AUDIO VISUAL LIMITED

DIMENSIONS IN INCHES/MILLIMETRES
THIRD ANGLE PROJECTION

TOLERANCES	
IMPERIAL	METRIC
FRACTION ± 1/64"	1 DEC PLACE ± 0·4 mm
DECIMAL ±·005"	2 DEC PLACE ± 0·1 mm
ANGULAR ± 0·25°	
UNLESS OTHERWISE STATED	

USED ON :-

		DATE
SCALE		
DRAWN	[illegible]	11/6/74
CHECKED	D.A.B.	11/6/74
APPROVED	A.B.B.	11/6/74

MATERIAL :-

FINISH :-

TITLE :-
MMS PSU CRATE WIRING DIAGRAM

ISSUE AB

DWG. Nº 7C12554

DWG. Nº 7C14301 | ISSUE C

DESK KLIPPON	PSU SOCKET	PDU KLIPPON	COLOUR	SIZE	SIGNAL	IDENTITY
10	1/1	-------	PINK	110/0076	+5V	
11	1/2	-------	PINK	110/0076	+5V	
11]•	1/3	-------	PINK	23/0076	+5V SENSE	SOCKET
16]	1/4	-------	GREEN	23/0076	0V SENSE	1
16	1/5	-------	GREEN	110/0076	0V	POWER
17	1/6	-------	GREEN	110/0076	0V	HARNESS
6	1/7	-------	RED	110/0076	+15V	
6]•	1/8	-------	RED	23/0076	+15V SENSE	
15]	1/9	-------	GREEN	23/0076	0V SENSE	
15	1/10	-------	GREEN	110/0076	0V	
32	1/1	-------	BLUE	110/0076	LPS +5V	
33	1/2	-------	BLUE	110/0076	LPS +5V	
*F 33]•	1/3	16]•	BLUE	23/0076	LPS +5V SENSE	SOCKET
*G 37]	1/4	17]	YELLOW	23/0076	LPS 0V SENSE	2
27	1/5	-------	YELLOW	110/0076	LPS 0V	POWER
28	1/6	-------	YELLOW	110/0076	LPS 0V	HARNESS
20	1/7	-------	GREEN	110/0076	0V	
20]•	1/8	-------	GREEN	23/0076	0V SENSE	
23]	1/9	-------	BLACK	23/0076	-15V SENSE	
23	1/10	-------	BLACK	110/0076	-15V	
12	1/1	-------	PINK	110/0076	+5V	
13	1/2	-------	PINK	110/0076	+5V	
13]•	1/3	-------	PINK	23/0076	+5V SENSE	SOCKET
18]	1/4	-------	GREEN	23/0076	0V SENSE	3
18	1/5	-------	GREEN	110/0076	0V	POWER
19	1/6	-------	GREEN	110/0076	0V	HARNESS
34	1/1	-------	BLUE	110/0076	LPS +5V	
35	1/2	-------	BLUE	110/0076	LPS +5V	
35]•	1/3	-------	BLUE	23/0076	LPS +5V SENSE	SOCKET
29]	1/4	-------	YELLOW	23/0076	LPS 0V SENSE	4
29	1/5	-------	YELLOW	110/0076	LPS 0V	POWER
30	1/6	-------	YELLOW	110/0076	LPS 0V	HARNESS

• TWISTED TOGETHER

WHEN A & B BUS USED LINK

A BUS KLIPPON		B BUS KLIPPON	COLOUR	SIZE	SIGNAL
21	-	21	GREEN	110/0076	0V
22	-	22	GREEN	110/0076	0V
38	-	38	ORANGE	110/0076	+5V STBY
42	-	42	VIOLET	110/0076	-15V STBY

DESK KLIPPON	DESK CAPACITOR	COLOUR	SIZE	SIGNAL	
17	0V △	GREEN	110/0076	0V	2 x 7,500uF 25V
12	+7,500uF 25V □	PINK	110/0076	+5V	FIT TO ALL BUSES
34	+7,500uF 25V ○	BLUE	110/0076	LPS+5V	
8	+5,000uF 40V	RED	110/0076	+15V	3,300µF 40V FIT IF BUS
17	0V	GREEN	110/0076	0V	IS > 4M LONG
17	+5,000uF 40V	GREEN	110/0076	0V	3,300µF 40V
25	0	BLACK	110/0076	-15V	

USE BRADY CABLE MARKERS ON WIRES AT DESK END WITH DESK KLIPPON NOS. *H

	DESK KLIPPON	PSU SOCKET	PDU KLIPPON	COLOUR & SIZE		SIGNAL	IDENTITY
*A	1	------	7	GREEN/YELLOW	110/0076	CHASSIS EARTH	MARK WITH
	37	------	8	ORANGE	110/0076	+5V STBY	DESK KLIPPON
*B	21	------	9	GREEN	110/0076	0V STBY	NOS. DESK
*C	41	------	10	VIOLET	110/0076	-15V STBY	END, PDU
*D	9	------	11	RED	14/0076	+15V IND	KLIPPON
*E	14	------	12	PINK	14/0076	+5V IND	NOS. PDU
	26	------	13	BLACK	14/0076	-15V IND	END, WITH
	36	------	14	BLUE	14/0076	LAMPS IND	BRADY
	22	------	15	GREEN	14/0076	IND COM	MARKERS
	------	2/1	4	BROWN	3 CORE	P	SOCKET 1
	------	2/7	5	BLUE	MAINS	N	POWER
	------	2/10	6	GREEN/YELLOW	40/0076	E	HARNESS
	------	2/1	4	BROWN	3 CORE	P	2
	------	2/7	5	BLUE	MAINS	N	POWER
	------	2/10	6	GREEN/YELLOW	40/0076	E	HARNESS
	------	2/9	18	WHITE	40/0076	PROG	
	------	2/1	4	BROWN	3 CORE	P	3
	------	2/7	5	BLUE	MAINS	N	POWER
	------	2/10	6	GREEN/YELLOW	40/0076	E	HARNESS
	------	2/1	4	BROWN	3 CORE	P	4
	------	2/7	5	BLUE	MAINS	N	POWER
	------	2/10	6	GREEN/YELLOW	40/0076	E	HARNESS
	------	2/9	18	WHITE	40/0076	PROG	

POWER HARNESS TAILS TO PDU 0.9 MTRS. LONG

CONNECTION CHANGES WHEN B BUS & DUAL P.D.U. USED

*A	9	------	19	RED	14/0076	+15V IND	
*B	14	------	20	PINK	14/0076	+5V IND	
*C	26	------	21	BLACK	14/0076	-15V IND	
*D	36	------	22	BLUE	14/0076	LAMPS IND	
*E	22	------	15	GREEN	14/0076	IND COM	
*F	33]•	1/3	23]•	BLUE	23/0076	LPS +5V SENSE	
*G	37]	1/4	24]	YELLOW	23/0076	LPS 0V SENSE	2
*H	------	------	25	WHITE	40/0076	PROG	2 †

POWER HARNESS SOCKETS, 1/ & 2/ ARE BOLTED TOGETHER TO GIVE A 20 WAY PLUG & SOCKET ASSEMBLY 1/- IS THE LOW VOLTAGE & IS BEHIND 2/ WHICH CARRIES MAINS & PROGRAM (AS REQUIRED).

OMIT POWER HARNESS'S AS REQUIRED

THIS SHEET DETAILS CONNECTIONS FOR UP TO 2 LOGIC & 2 LAMP P.S.U.s BEING PARALLELED. IF MORE P.S.U.s ARE REQUIRED, A "B" BUS MUST BE USED, CONNECTIONS BEING AS PER THIS SHEET IF A SLAVE PDU IS FITTED.

† IF A DUAL PDU IS USED NOTE CHANGE OF CONNECTIONS MARKED *A TO *H

FIG.BB5

REV.2. C.Nº E1920 Wiring Colours Changed On Stby. Supplies, +5V. Was Pink -15V, " Black. Also Re-typed. 10-12-74.

RANK STRAND ELECTRIC
PO Box 70 Great West Road Brentford Middlesex TW8 9HR
Telephone 01-568 9222 Telex 24408
A DIVISION OF
RANK AUDIO VISUAL LIMITED

DIMENSIONS IN INCHES/MILLIMETRES
THIRD ANGLE PROJECTION

TOLERANCES	
IMPERIAL	METRIC
FRACTION ± 1/64"	1 DEC PLACE ± 0·4 mm
DECIMAL ±·005"	2 DEC PLACE ± 0·1 mm
ANGULAR ± 0·25°	
UNLESS OTHERWISE STATED	

USED ON :-

		DATE
SCALE		
DRAWN	A.W.	9-8-74
CHECKED		"
APPROVED		31-10-74
MATERIAL :-		
FINISH :-		

TITLE :- MMS STANDARD POWER INTERCONNECTIONS.

ISSUE C | DWG. Nº 7C14301

DWG. Nº H 107 B | ISSUE ~~A~~B

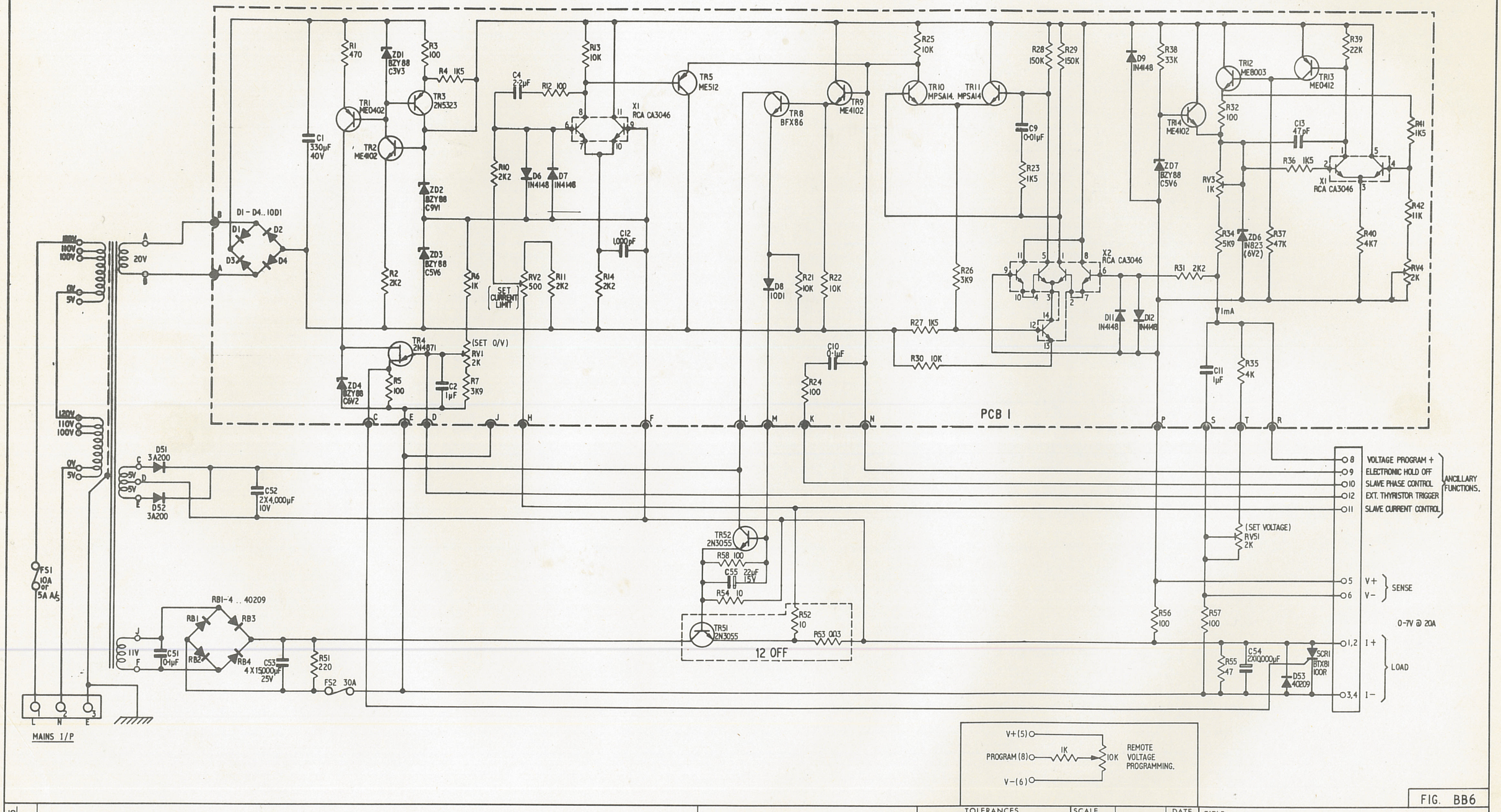

FIG. BB6

REV. 1. C. Nº E 2165
FUSE FS1 WAS 15A
13.5.75.

RANK STRAND ELECTRIC
PO Box 70 Great West Road Brentford Middlesex TW8 9HR
Telephone 01-568 9222 Telex 24408
A DIVISION OF
RANK AUDIO VISUAL LIMITED

DIMENSIONS IN INCHES/MILLIMETRES
THIRD ANGLE PROJECTION

TOLERANCES		
IMPERIAL	METRIC	
FRACTION ± 1/64"	1 DEC PLACE ± 0·4 mm	
DECIMAL ± ·005"	2 DEC PLACE ± 0·1 mm	
ANGULAR ± 0·25°		
UNLESS OTHERWISE STATED		
USED ON :-		

SCALE		DATE
DRAWN	C. COOPER	30.5.74
CHECKED	DRB	31/5/74
APPROVED	DRB	3/6/74
MATERIAL :-		
FINISH :-		

TITLE :-
BELIX POWER SUPPLY 5V, 20A. MODULE 6A
(CONSTANT CURRENT LIMIT AND O/V PROTECTION)
CIRCUIT DIAGRAM

ISSUE ~~A~~B | DWG. Nº H 107 B

DWG. Nº H111B	ISSUE A B C

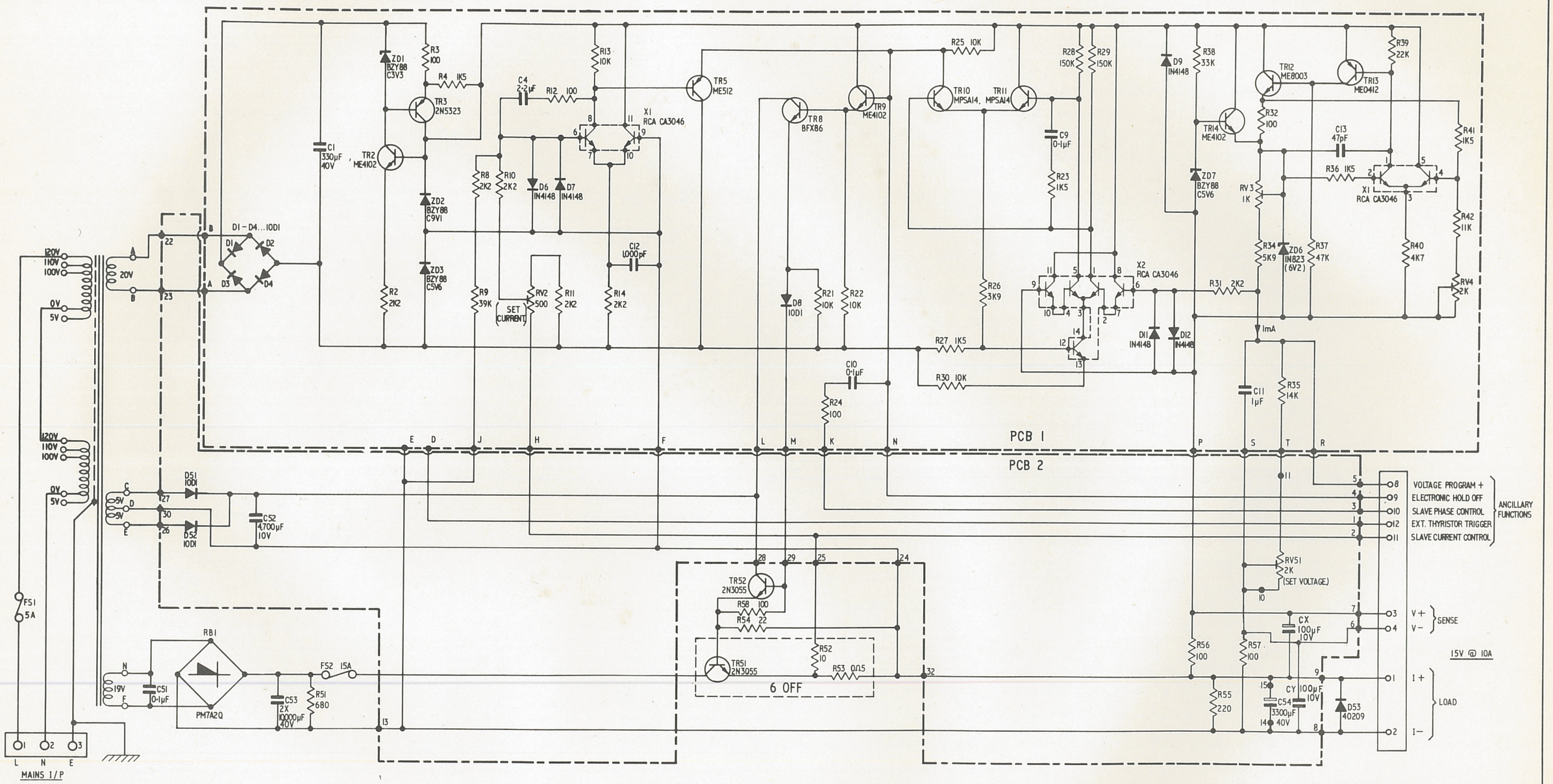

FIG. BB7

REV.1 C.Nº E2118 CAPACITORS CX & CY. ADDED 4.4.75	REV.2 E2165 FUSE FS1 WAS 10A. 13.5.75.

RANK STRAND ELECTRIC
PO Box 70 Great West Road Brentford Middlesex TW8 9HR
Telephone 01-568 9222 Telex 24408
A DIVISION OF
RANK AUDIO VISUAL LIMITED

DIMENSIONS IN INCHES/MILLIMETRES
THIRD ANGLE PROJECTION

TOLERANCES	
IMPERIAL	METRIC
FRACTION ± 1/64"	1 DEC PLACE ± 0·4 mm
DECIMAL ± ·005"	2 DEC PLACE ± 0·1 mm
ANGULAR ± 0·25°	
UNLESS OTHERWISE STATED	
USED ON :-	

		DATE
SCALE		
DRAWN	C. COOPER	3.6.74
CHECKED		
APPROVED		
MATERIAL :-		
FINISH :-		

TITLE :-
BELIX POWER SUPPLY 15V, 10A. MODULE 5B
(RE-ENTRANT CURRENT LIMIT)
CIRCUIT DIAGRAM.

ISSUE A B C | DWG. Nº H111B

DWG. Nº H 108 B | ISSUE A

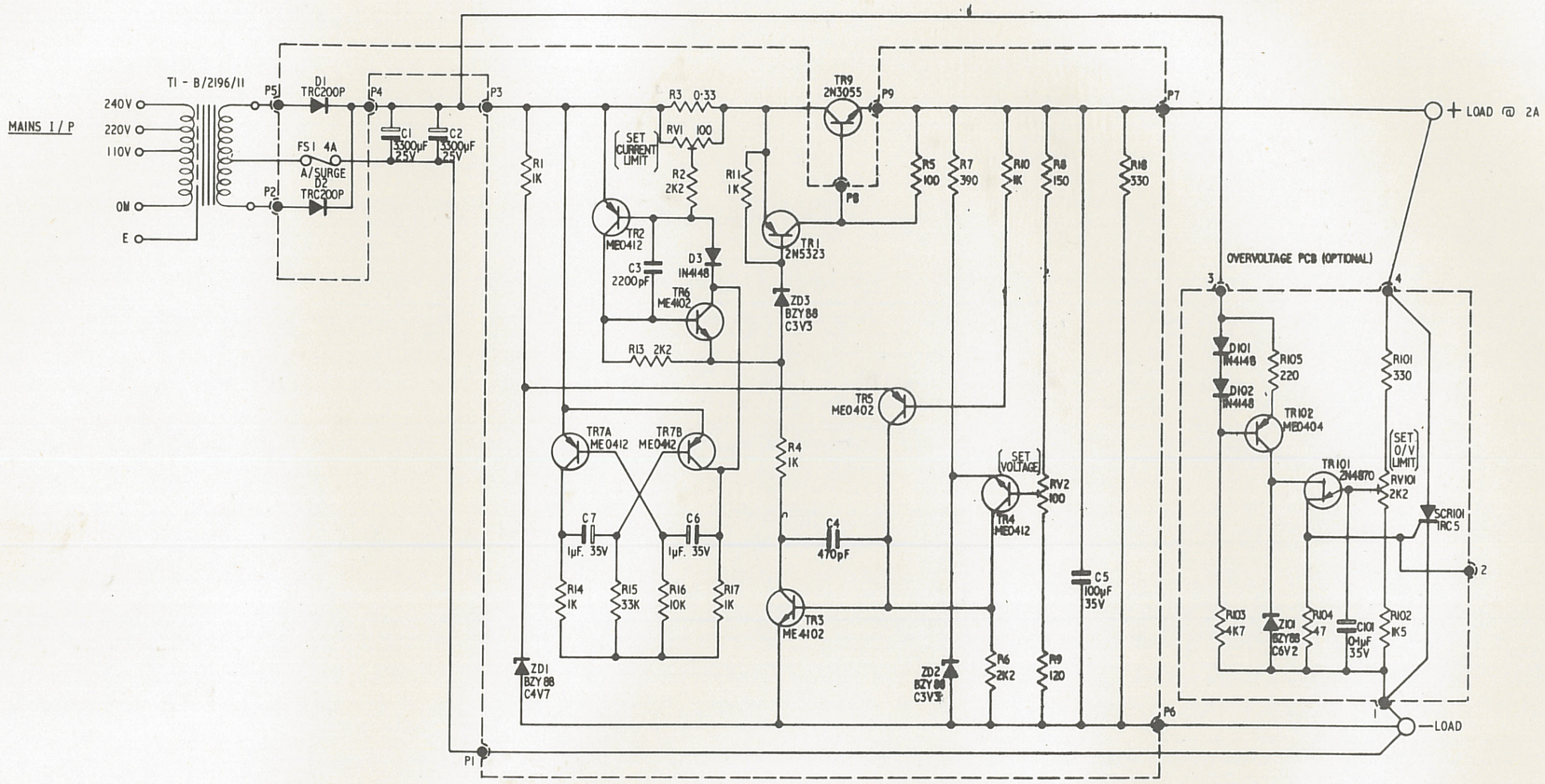

FIG. BB8.

RANK STRAND ELECTRIC PO Box 70 Great West Road Brentford Middlesex TW8 9HR Telephone 01-568 9222 Telex 24408 A DIVISION OF RANK AUDIO VISUAL LIMITED	TOLERANCES IMPERIAL / METRIC FRACTION ± 1/64" / 1 DEC PLACE ± 0·4 mm DECIMAL ± ·005" / 2 DEC PLACE ± 0·1 mm ANGULAR ± 0·25° UNLESS OTHERWISE STATED	SCALE DRAWN C. COOPER 27.5.74 CHECKED DRB 6/6/74 APPROVED DRB 6/6/74 MATERIAL :-	TITLE :- BELIX POWER SUPPLY 5V, 2A. MODULE 2 CIRCUIT DIAGRAM.		
DIMENSIONS IN INCHES/MILLIMETRES THIRD ANGLE PROJECTION	USED ON :-	FINISH :-	ISSUE A	DWG. Nº H 108 B	

REV. 1. C. Nº

DWG. Nº H109B	ISSUE A

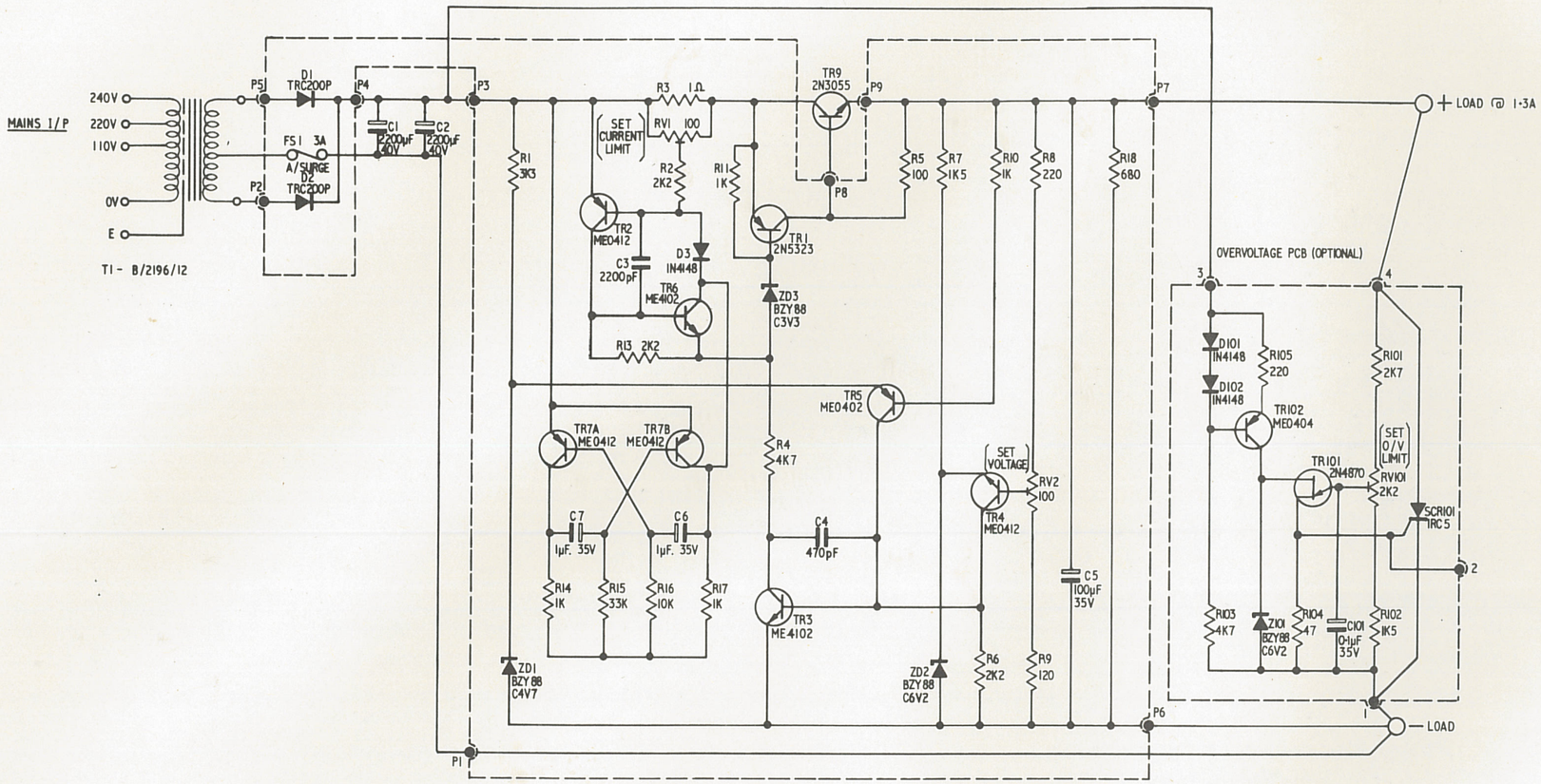

FIG. BB9

REV.I. C.Nº

RANK STRAND ELECTRIC
PO Box 70 Great West Road Brentford Middlesex TW8 9HR
Telephone 01-568 9222 Telex 24408
A DIVISION OF
RANK AUDIO VISUAL LIMITED

DIMENSIONS IN INCHES/MILLIMETRES
THIRD ANGLE PROJECTION

TOLERANCES		SCALE		DATE
IMPERIAL	METRIC	DRAWN	C. COOPER	27.5.74
FRACTION ± 1/64"	1 DEC PLACE ± 0·4mm	CHECKED		
DECIMAL ± ·005"	2 DEC PLACE ± 0·1mm	APPROVED		
ANGULAR ± 0·25°		MATERIAL :-		
UNLESS OTHERWISE STATED				
USED ON :-		FINISH :-		

TITLE :-
BELIX POWER SUPPLY 15V, 1·3A.
MODULE 2
CIRCUIT DIAGRAM

ISSUE A | DWG. Nº H109B

DWG. Nº 7A17712 | ISSUE A B

MODULE POWER I/P SOCKET

(SOCKET VIEW)

GRN/YL — CHASSIS E
RED — + 15V
PNK — + 5V LOGIC
GRN
BLK — TECH. E
YEL — − 15V
BLU — LAMPS COMM.
OR — + VE LPS
VI — + 5V S/BY
− 15V S/BY

CHASSIS E, + 15V, + 5V LOGIC, TECH E, − 15V, LAMPS COMM, + VE LPS, + 5V S/BY, − 15V S/BY

RING CONTINUED AND RETURNED TO DESK TERMINAL RAIL. SPUR PLUGS FROM TERMINAL RAIL ARE FITTED AT INTERVALS TO REDUCE VOLTAGE DROP IN RING.

BLU, PNK, GRN. — + 7500μF + 7500μF 25V 0V CAPACITOR

CHASSIS E, + 15V, + 5V LOGIC, 0V, − 15V, LAMP COMM, + VE LPS, + 5V S/BY, − 15V S/BY

DESK POWER BUS II TERMINAL RAIL.

RED, GRN. — + 5,000μF 40V 0V CAPACITOR

GRN, BLK — + 5000μF 40V 0V CAPACITOR

POWER BUS II

L.V. TERMINAL RAIL II

ABOVE PSUs, TERMINAL RAILS AND WIRING ON DUAL POWER BUS SYSTEMS ONLY. ie LPS OR + 5V SUPPLY NEEDED IS GREATER THAN 40A.)

POWER BUS I

MODULE POWER I/P SOCKET

(SOCKET VIEW)

GRN/YL — CHASSIS E
RED — + 15V
PNK — + 5V LOGIC
GRN
BLK — TECH. E
YEL — − 15V
BLU — LAMPS COMM.
OR — + VE LPS
VI — + 5V S/BY
− 15V S/BY

CHASSIS E, + 15V, + 5V LOGIC, TECH E, − 15V, LAMPS COMM, + VE LPS, + 5V S/BY, − 15V S/BY

RING CONTINUED AND RETURNED TO DESK TERMINAL RAIL. SPUR PLUGS FROM TERMINAL RAIL ARE FITTED AT INTERVALS TO REDUCE VOLTAGE DROP IN RING.

BLU, PNK, GRN — + 7500μF + 7500μF 25V 0V CAPACITOR

CHASSIS E, + 15V, + 5V LOGIC, 0V, − 15V, LAMP COMM, + VE LPS, + 5V S/BY, − 15V S/BY

DESK POWER BUS I TERMINAL RAIL

MAX LENGTH 5M.

RED, GRN — + 5000μF 40V 0V CAPACITOR

GRN, BLK — + 5000μF 40V 0V CAPACITOR

L.V. TERMINAL RAIL I

MAINS I/P: L, N, E

SWITCHED MAINS O/P: L, N, E

H.V. TERMINAL RAIL

E N L — GRN/YL, BL, BN

POWER TO FANS FITTED IN DUAL BUS CABINET.

WIRE SIZES:-
0·5 mm²
1·5 mm²
2·5 mm²
4·0 mm²

+ 5V (II) — (9) — (5V 40A)
− 15V. (II) — (10) — (15V. 7A)
LPS. (II) — (8) — (5V. 40A)
+ 15V. — (4) — (15V, 7A)
+ 5V (I) — (6) — (5V, 40A)
− 15V. (I) — (7) — (15V, 7A)
LPS (I) — (5) — (5V, 40A)
+ 5V S/BY — (2) — (5V, 2A)
− 15V S/BY — (3) — (15V, 1·75A)
P.D.U. — (1) — (SP & N OR Δ)

RING LOOPED HERE IF ONLY SINGLE BUS FITTED

SWITCHED S/BY POWER

SWITCHED MAIN POWER RING

FIG B20

REV.J C.N.8 ELEK
WIRE SIZES ADDED & WIRES CORRECTED ON PSU 2, 3, 4, 9
22-10-74 CANCELLED
23-10-74

RANK STRAND ELECTRIC
PO BOX 70 Great West Road Brentford Middlesex TW8 9HR
Telephone 01-568 9222 Telex 24408
A DIVISION OF RANK AUDIO VISUAL LIMITED

DIMENSIONS IN INCHES/MILLIMETRES
THIRD ANGLE PROJECTION

TOLERANCES		SCALE		DATE
IMPERIAL	METRIC	DRAWN		17.7.74
FRACTION ± 1/64"	1 DEC PLACE ± 0·4mm	CHECKED		18-7-74
DECIMAL ± .005"	2 DEC PLACE ± 0·1mm	APPROVED		18-7-74
ANGULAR ± 0·25°		MATERIAL:-		
UNLESS OTHERWISE STATED				
USED ON:-		FINISH:-		

TITLE:- M.M.S. SWITCHING PSU's CABINET MOUNTED SYSTEM WIRING.

ISSUE A B | DWG. Nº 7A17712

DWG. Nº 7A17713	ISSUE A

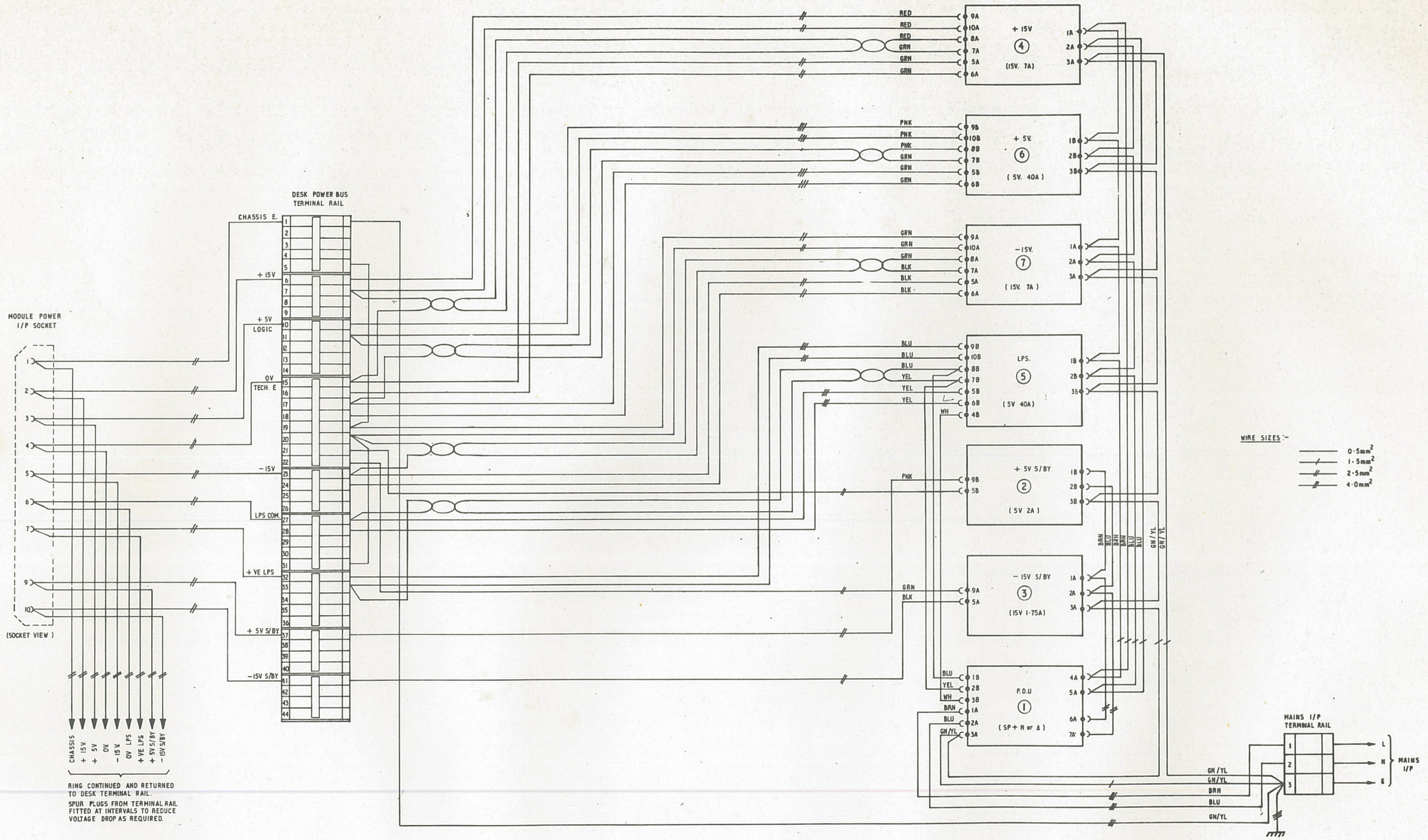

①	②	③	④	⑤	⑥	⑦
P.D.U	+5V S/BY	-15V S/BY	+15V	LPS	+5V	-15V

FRONT VIEW.

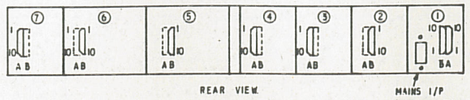

FIG B21

RANK STRAND ELECTRIC	TOLERANCES		SCALE	—	DATE	TITLE :- MMS SWITCHING PSU's DESK MOUNTED SYSTEM WIRING
PO BOX 70 Great West Road Brentford Middlesex TW8 9HR	IMPERIAL	METRIC	DRAWN		30-4-74	
Telephone 01-568 9222 Telex 24408	FRACTION ± 1/64"	1 DEC PLACE ± 0·4mm	CHECKED	DAS	15-7-74	
A DIVISION OF RANK AUDIO VISUAL LIMITED	DECIMAL ± ·005"	2 DEC PLACE ± 0·1mm	APPROVED	AA	15-7-74	
	ANGULAR ± 0·25°		MATERIAL :-			
	UNLESS OTHERWISE STATED		FINISH :-			ISSUE A . DWG. Nº 7A17713
DIMENSIONS IN INCHES/MILLIMETRES	USED ON :-					
THIRD ANGLE PROJECTION						

REV.| C.N°

DWG. Nº 1A16974 | ISSUE A.

FRONT VIEW

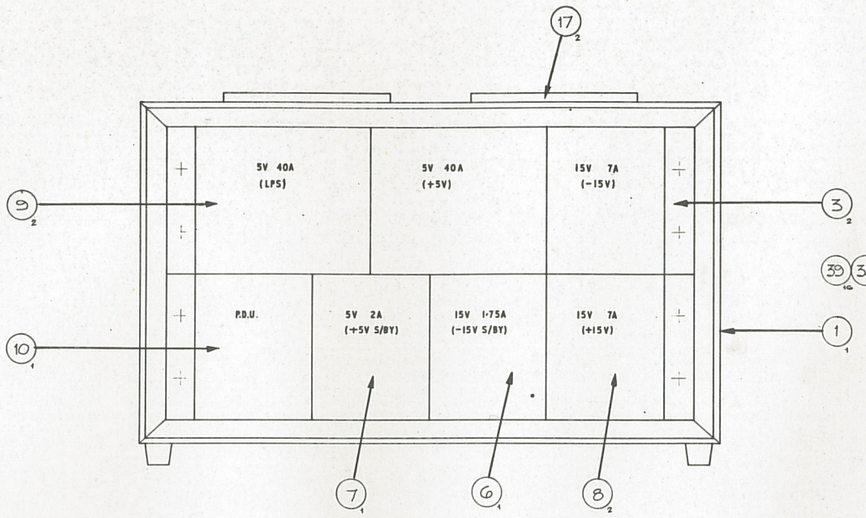

REAR VIEW

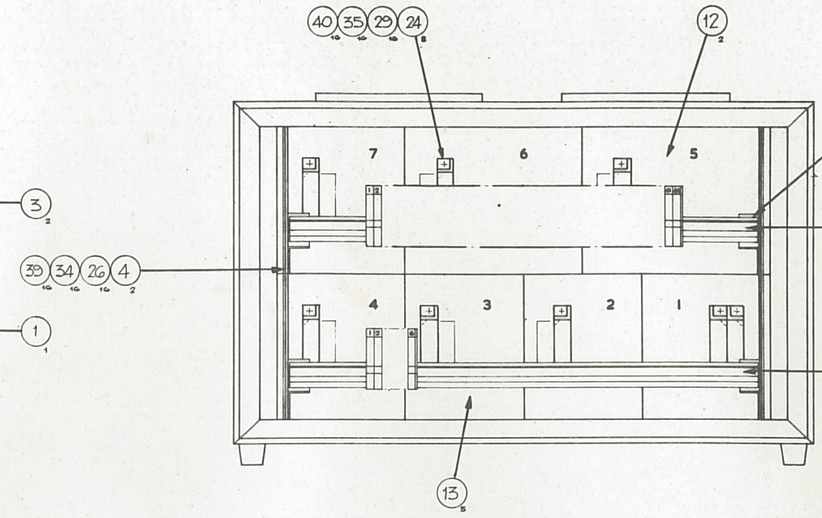

SINGLE POWER BUS

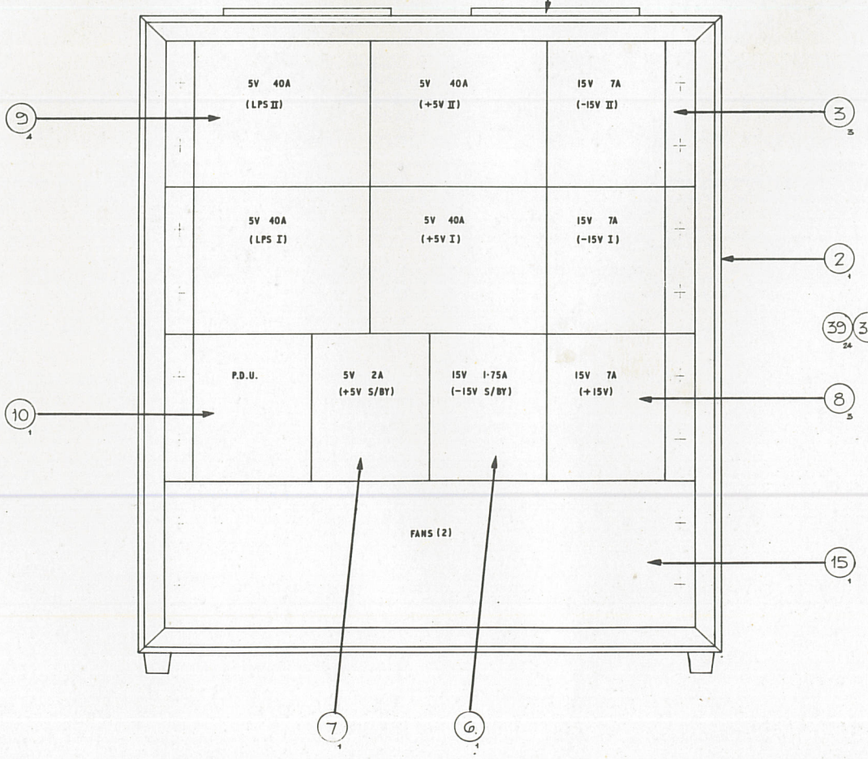

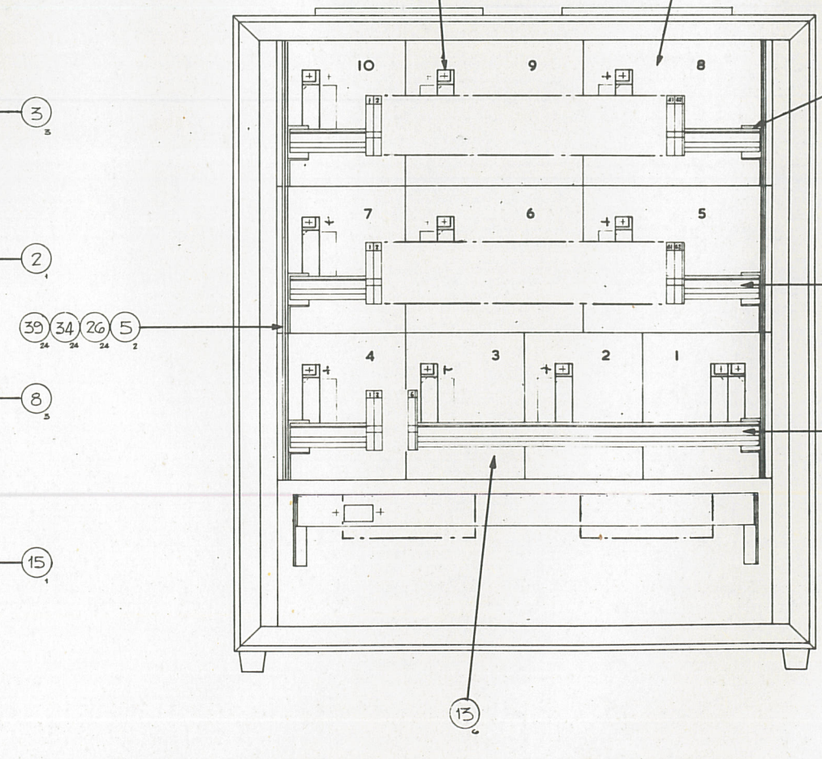

DOUBLE POWER BUS

NOTE
ITEM (16) FITTED ON ASSEM

SCHEDULE No 1516260

FIG B22

RANK STRAND ELECTRIC
A DIVISION OF RANK AUDIO VISUAL LIMITED
DIMENSIONS IN INCHES MILLIMETRES
THIRD ANGLE PROJECTION

TOLERANCES		SCALE 1·2	DATE
IMPERIAL	METRIC	DRAWN	21.4.76
FRACTION ± 1/64	1 DEC PLACE ± 0·4mm	CHECKED	
DECIMAL ± .005	2 DEC PLACE ± 0·1mm	APPROVED	
ANGULAR ± 0·25		MATERIAL -	
UNLESS OTHERWISE STATED			
USED ON - MMS PSU (SWITCHING)		FINISH -	

TITLE: POWER SUPPLY CABINET ASSEM'S

ISSUE A. | DWG. Nº 1A16974

DWG. Nº 7C 16634	ISSUE A

REAR VIEW

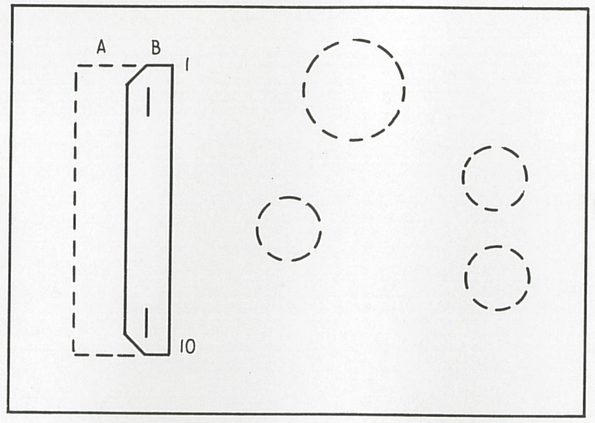

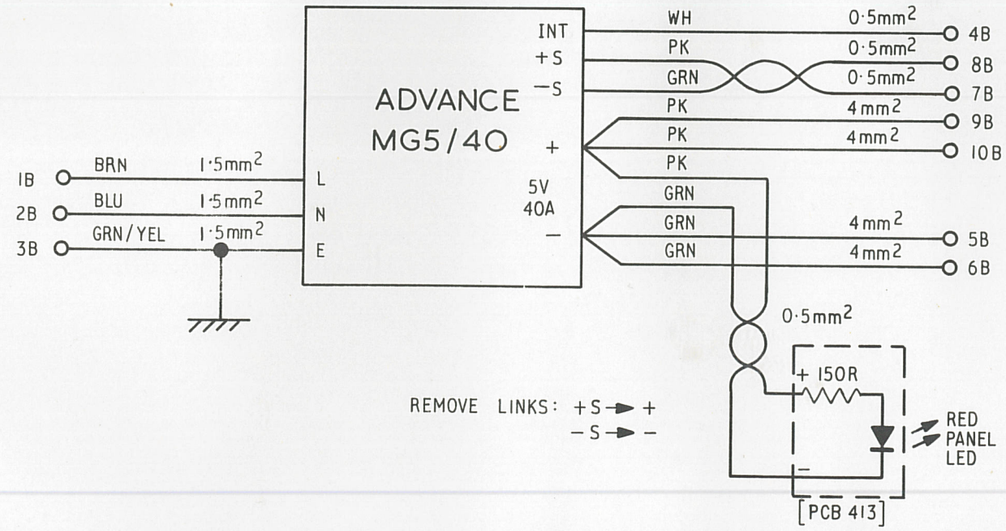

MMS 5V 40A P.S.U.

REAR VIEW

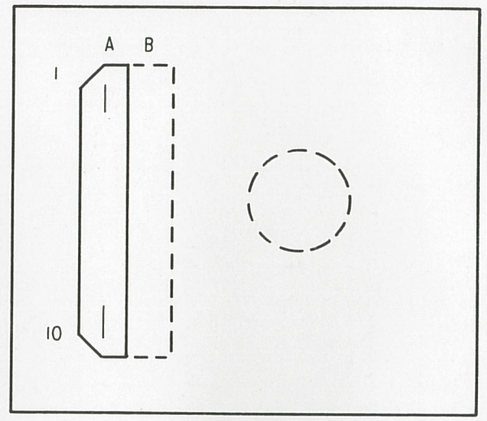

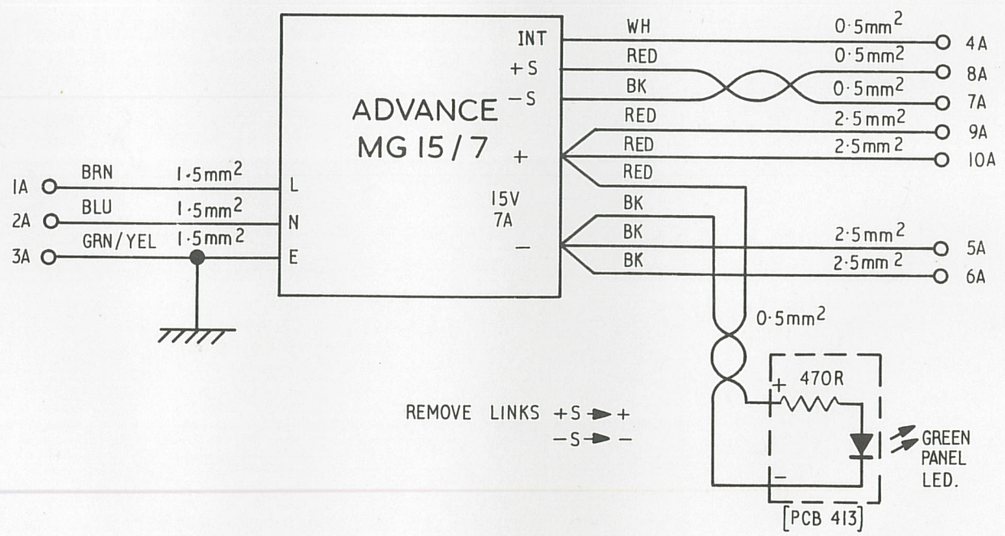

MMS 15V 7A P.S.U.

FIG B23

REV.1. C.N°

RANK STRAND ELECTRIC
PO Box 70 Great West Road Brentford Middlesex TW8 9HR
Telephone 01-568 9222 Telex 24408
A DIVISION OF
RANK AUDIO VISUAL LIMITED

DIMENSIONS IN INCHES/MILLIMETRES
THIRD ANGLE PROJECTION

TOLERANCES	
IMPERIAL	METRIC
FRACTION ± 1/64"	1 DEC PLACE ± 0·4 mm
DECIMAL ± ·005"	2 DEC PLACE ± 0·1 mm
ANGULAR ± 0·25°	
UNLESS OTHERWISE STATED	
USED ON :-	

SCALE			DATE
DRAWN	D.L.G		2-1-76
CHECKED			6-7-76
APPROVED			6-7-76
MATERIAL :-			
FINISH :-			

TITLE :-
MMS SWITCHING PSU'S
MAIN SUPPLY MODULES

ISSUE A | DWG. Nº 7C 16634

DWG. Nº 7C 16635 | ISSUE A

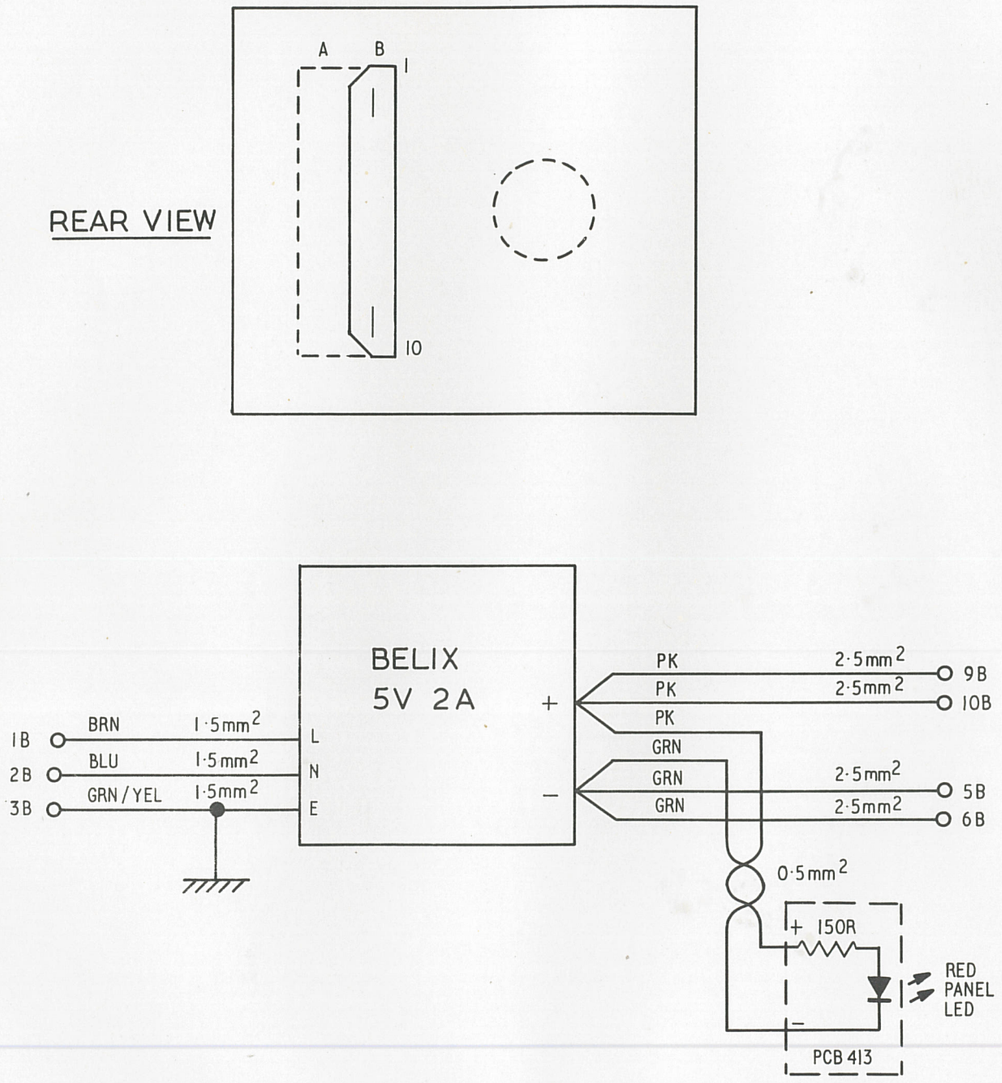

MMS 5V 2A S/BY P.S.U.

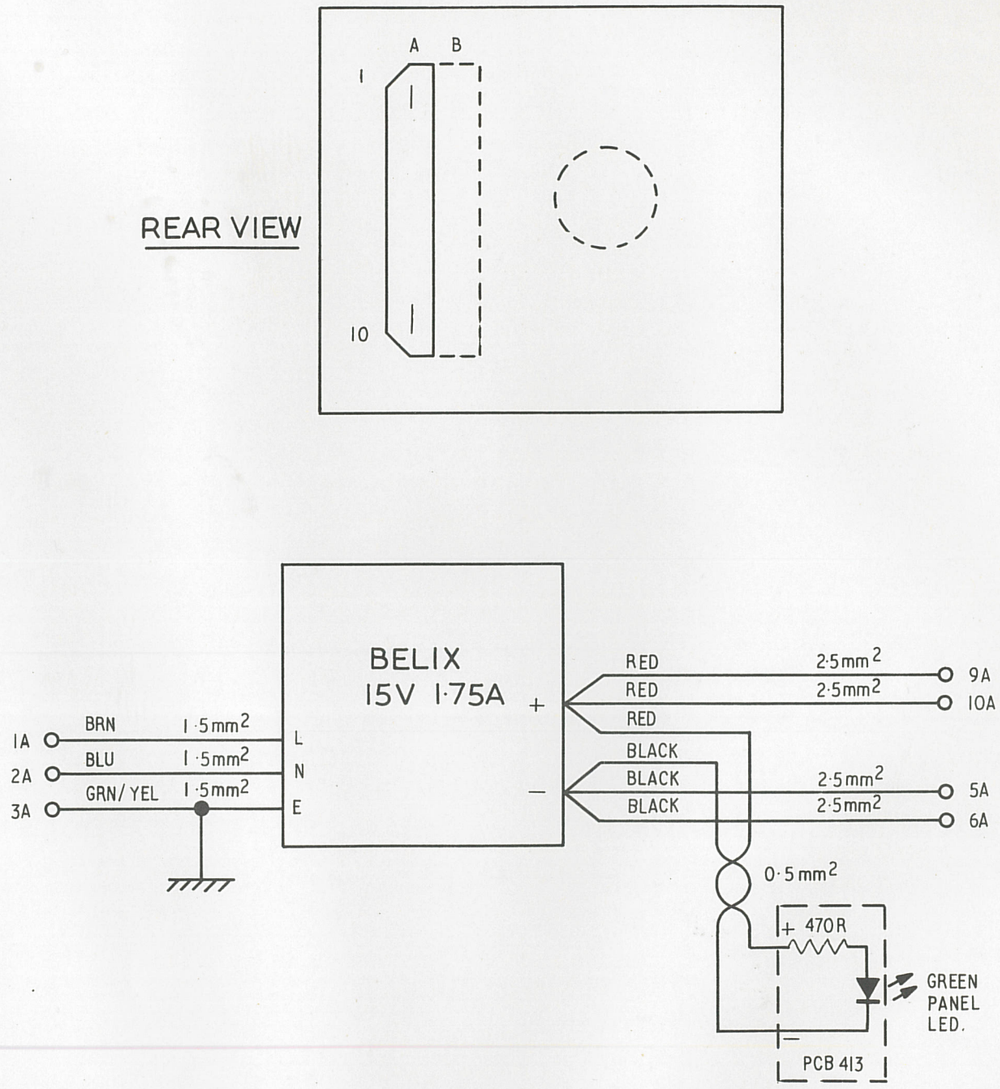

MMS 15V 1·75A S/BY P.S.U.

FIG B24

REV. 1. C.Nº	RANK STRAND ELECTRIC PO Box 70 Great West Road Brentford Middlesex TW8 9HR Telephone 01-568 9222 Telex 24408 A DIVISION OF RANK AUDIO VISUAL LIMITED	TOLERANCES IMPERIAL / METRIC FRACTION ± 1/64" / 1 DEC PLACE ± 0·4 mm DECIMAL ± ·005" / 2 DEC PLACE ± 0·1 mm ANGULAR ± 0·25° UNLESS OTHERWISE STATED	SCALE — / DATE DRAWN D.L.G. / 2·1·76 CHECKED / 2·2·76 APPROVED / 6·7·76 MATERIAL :-	TITLE :- MMS SWITCHING PSU'S S/BY SUPPLY MODULES		
	DIMENSIONS IN INCHES/MILLIMETRES THIRD ANGLE PROJECTION	USED ON :-	FINISH :-	ISSUE A	DWG. Nº 7C 16635	

CWG & S

DWG. Nº 7C 16633	ISSUE A

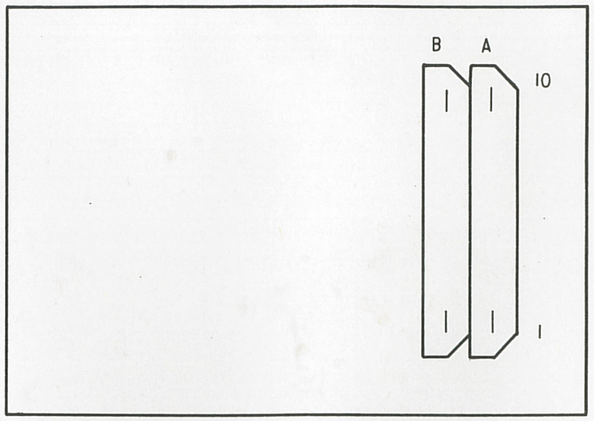

REAR VIEW

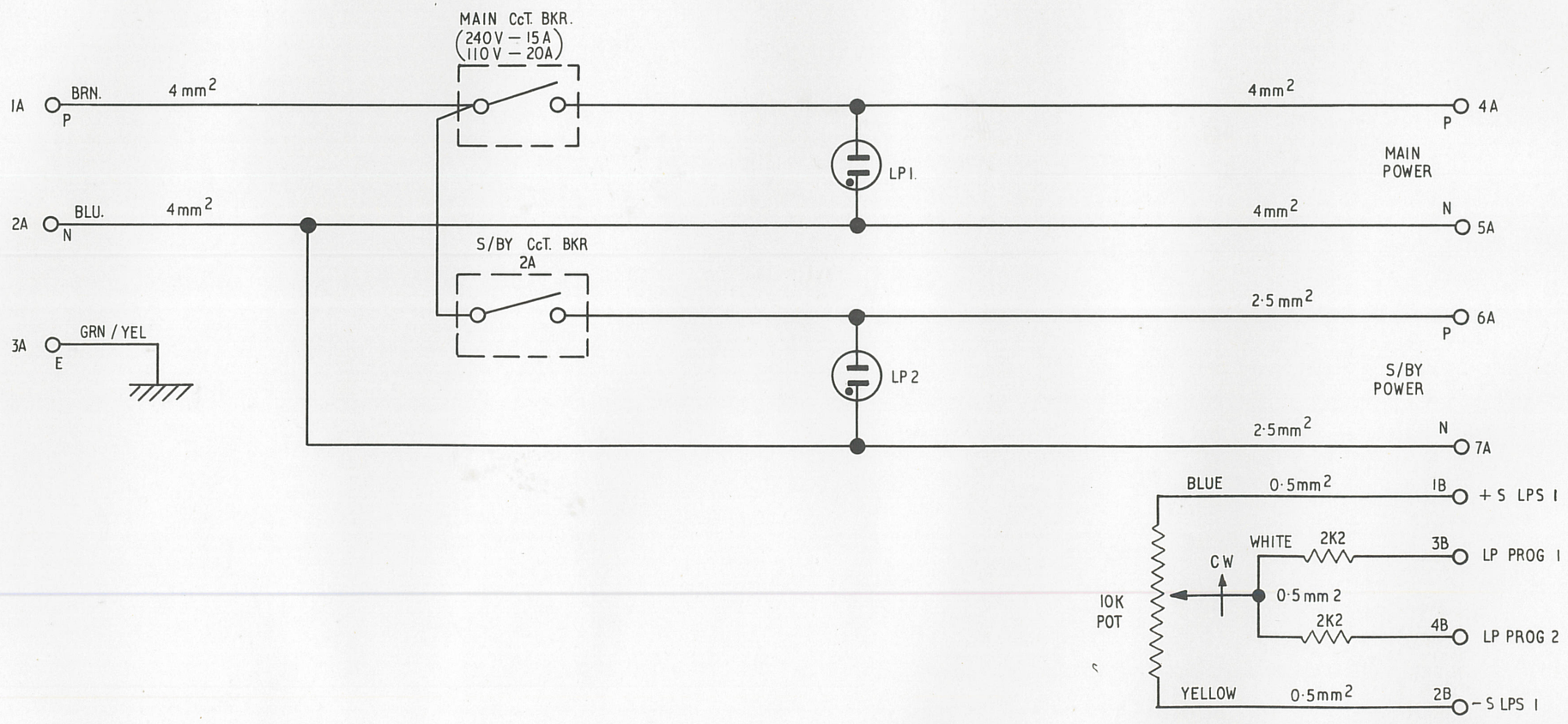

FIG B25

REV. 1. C.Nº:

RANK STRAND ELECTRIC
PO Box 70 Great West Road Brentford Middlesex TW8 9HR
Telephone 01-568 9222 Telex 24408
A DIVISION OF
RANK AUDIO VISUAL LIMITED

DIMENSIONS IN INCHES/MILLIMETRES
THIRD ANGLE PROJECTION

TOLERANCES	
IMPERIAL	METRIC
FRACTION ± 1/64"	1 DEC PLACE ± 0·4 mm
DECIMAL ± ·005"	2 DEC PLACE ± 0·1 mm
ANGULAR ± 0·25°	
UNLESS OTHERWISE STATED	

USED ON :-

SCALE	—	DATE
DRAWN	DLG	26-9-75
CHECKED		6-7-76
APPROVED		6-7-76

MATERIAL :-

FINISH :-

TITLE :-

MMS SWITCHING PSU'S

P.D.U MODULE

ISSUE A

DWG. Nº 7C 16633

CWG & S

DWG. Nº 7C 17606	ISSUE A

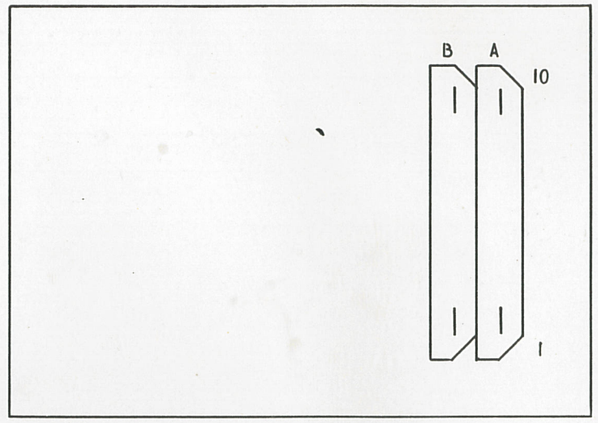

REAR VIEW

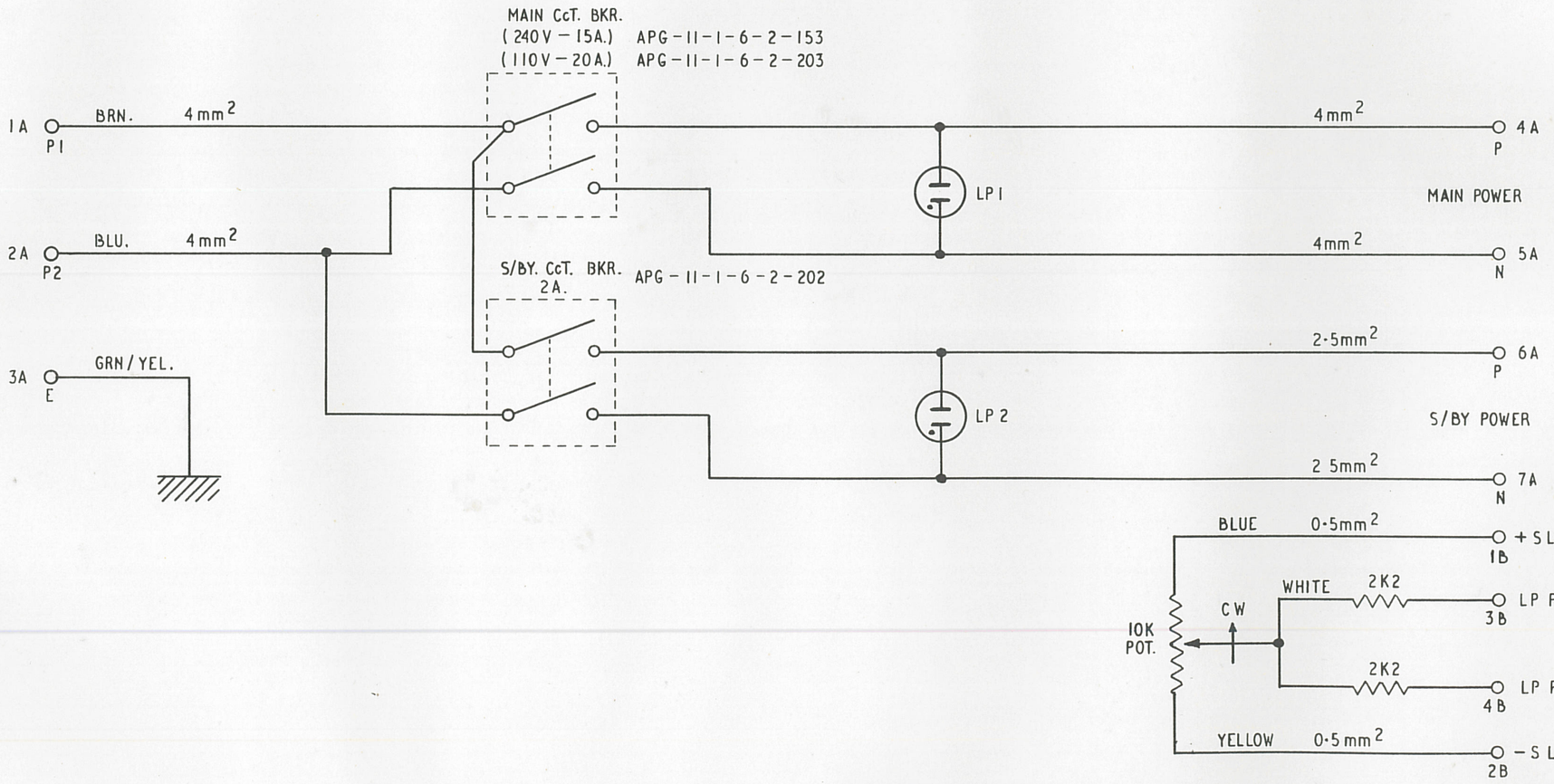

FIG B26

REV. 1. C.Nº

RANK STRAND ELECTRIC
PO Box 70 Great West Road Brentford Middlesex TW8 9HR
Telephone 01-568 9222 Telex 24408
A DIVISION OF
RANK AUDIO VISUAL LIMITED

DIMENSIONS IN INCHES/MILLIMETRES
THIRD ANGLE PROJECTION

TOLERANCES	
IMPERIAL	METRIC
FRACTION ± 1/64"	1 DEC PLACE ± 0·4 mm
DECIMAL ± ·005"	2 DEC PLACE ± 0·1 mm
ANGULAR ± 0·25°	
UNLESS OTHERWISE STATED	

USED ON :-

SCALE		DATE
DRAWN	R Lyttle	29·4·76
CHECKED		30·4·76
APPROVED	DMS	6-7-76

MATERIAL :-

FINISH :-

TITLE :-

MMS SWITCHING P.S.U'S.
DELTA P.D.U. MODULE.

ISSUE A

DWG. Nº 7C 17606

CWG & S

DWG. Nº H 108 B	ISSUE A

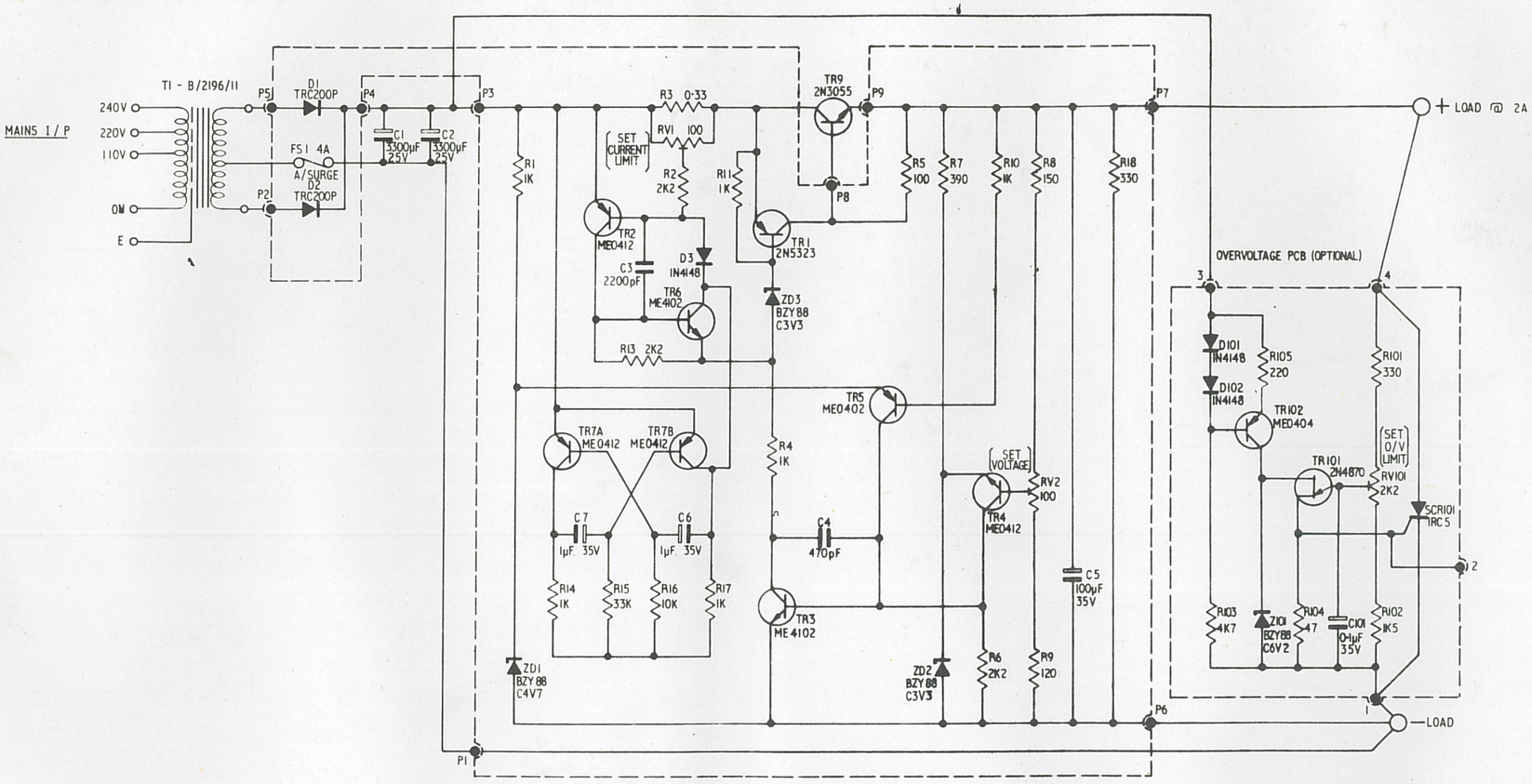

FIG B28 BB8

REV 1 C.N°

RANK STRAND ELECTRIC	TOLERANCES		SCALE		DATE	TITLE
PO Box 70 Great West Road Brentford Middlesex TW8 8HR	IMPERIAL	METRIC	DRAWN	C. COOPER	27.5.74	BELIX POWER SUPPLY 5V, 2A. MODULE 2 CIRCUIT DIAGRAM.
Telephone 01-568 9222 Telex 24408	FRACTION ± 1/64"	1 DEC PLACE ± 0.4 mm	CHECKED			
A DIVISION OF	DECIMAL ± .005"	2 DEC PLACE ± 0.1 mm	APPROVED			
RANK AUDIO VISUAL LIMITED	ANGULAR ± 0·25°		MATERIAL			
DIMENSIONS IN INCHES/MILLIMETRES	UNLESS OTHERWISE STATED		FINISH			ISSUE A — DWG. Nº H 108B
THIRD ANGLE PROJECTION	USED ON					

DWG. Nº H191B | ISSUE ~~A~~ B

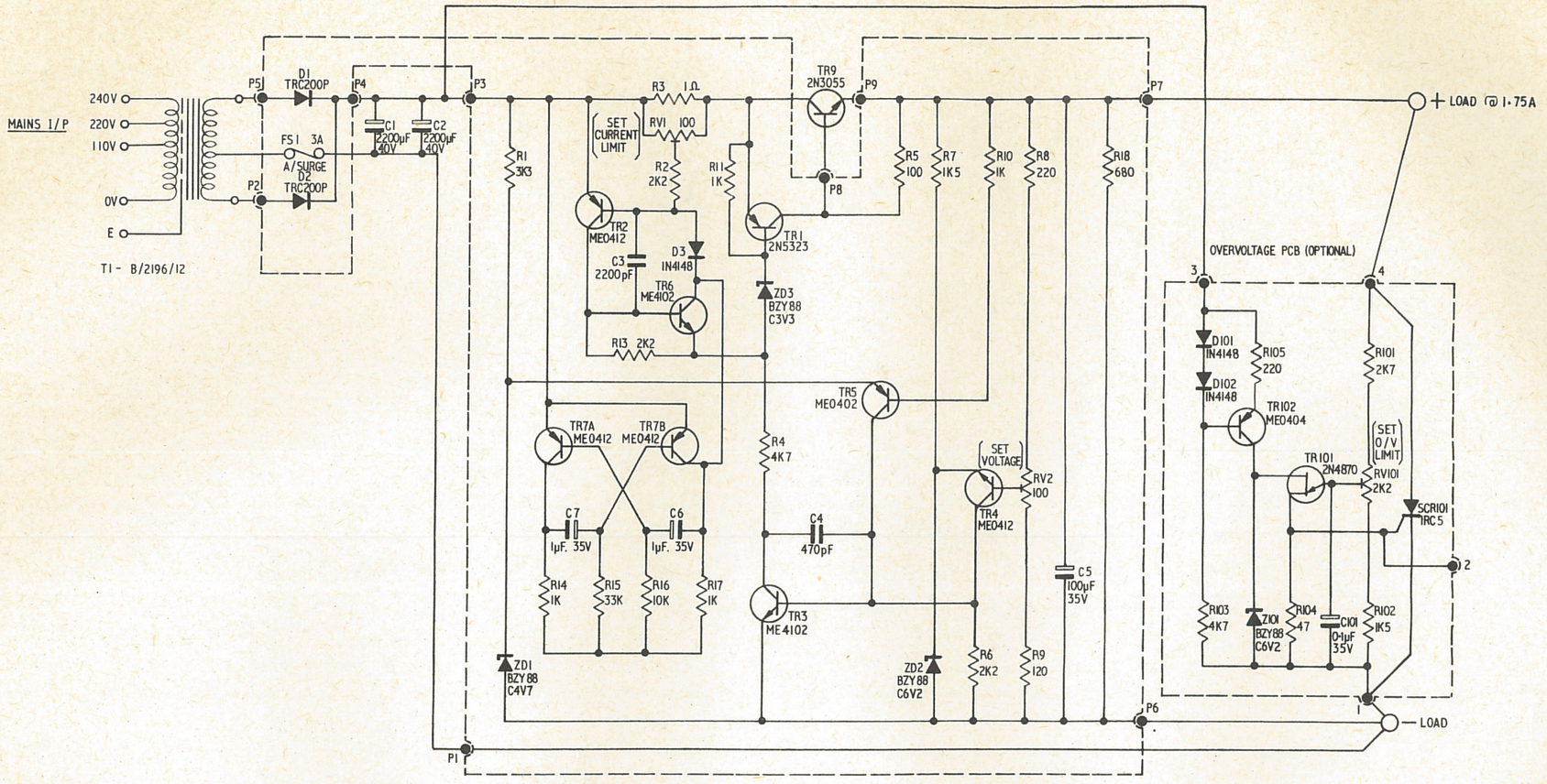

NOTE
PSU RATING WAS 1·3A

FIG B29

REV. 1. C.Nº E248
O/P TERMINAL
+ LOAD @ 1·75A
WAS 1·3A.
NOTE P.S.U RATING.
ADDED

RANK STRAND ELECTRIC
PO Box 70 Great West Road Brentford Middlesex TW8 9HR
Telephone 01-568 9222 Telex 24408
A DIVISION OF
RANK AUDIO VISUAL LIMITED

DIMENSIONS IN INCHES/MILLIMETRES
THIRD ANGLE PROJECTION

TOLERANCES	
IMPERIAL	METRIC
FRACTION ± 1/64"	1 DEC PLACE ± 0·4 mm
DECIMAL ± ·005"	2 DEC PLACE ± 0·1 mm
ANGULAR ± 0·25°	
UNLESS OTHERWISE STATED	
USED ON :-	

SCALE		DATE
DRAWN	C. COOPER	27.5.74
CHECKED		
APPROVED		
MATERIAL		
FINISH :-		

TITLE
BELIX POWER SUPPLY 15V 1·75A.
MODULE 2
CIRCUIT DIAGRAM

ISSUE ~~A~~ B | DWG. Nº H191B

DWG. Nº 7B12959 | ISSUE A B

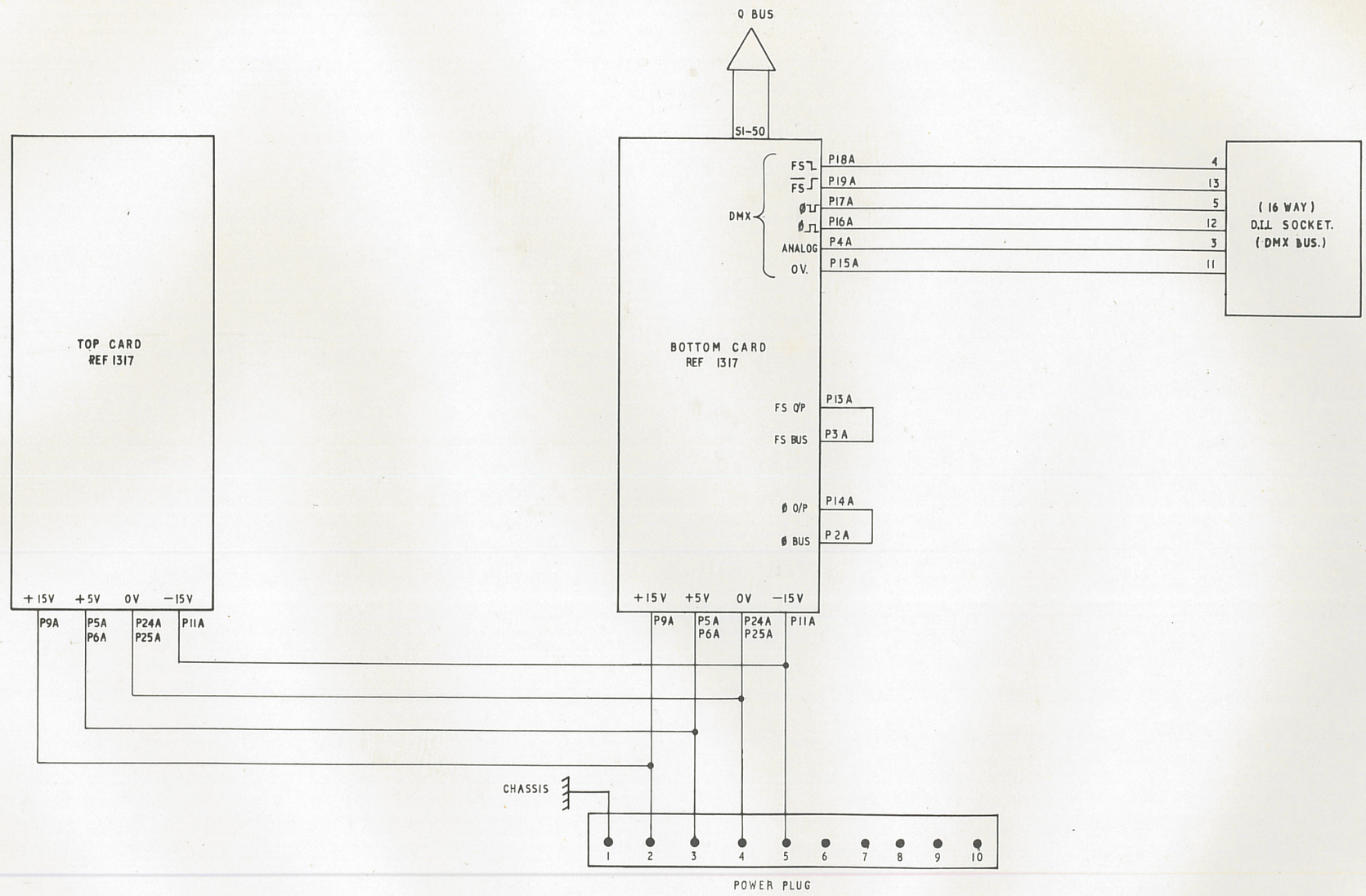

FIG. C1

REV.| C.Nº

RANK STRAND ELECTRIC
PO Box 70 Great West Road Brentford Middlesex TW8 9HR
Telephone 01-568 9222 Telex 24408
A DIVISION OF
RANK AUDIO VISUAL LIMITED

DIMENSIONS IN INCHES/MILLIMETRES
THIRD ANGLE PROJECTION

TOLERANCES		SCALE	—	DATE
IMPERIAL	METRIC	DRAWN	G H	2·11·73
FRACTION ± 1/64"	1 DEC PLACE ± 0·4mm	CHECKED	DLE	11/6/74
DECIMAL ±·005"	2 DEC PLACE ± 0·1mm	APPROVED	DAB	11/6/74
ANGULAR ± 0·25°		MATERIAL:-		
UNLESS OTHERWISE STATED				
USED ON:-		FINISH:-		

TITLE:-
BUS TERMINATION, CLOCK GENERATOR & DEMULTIPLEX DRIVE UNIT WIRING DIAGRAM.

ISSUE A B | DWG. Nº 7B12959

DWG. Nº 7B 14129	ISSUE A B C

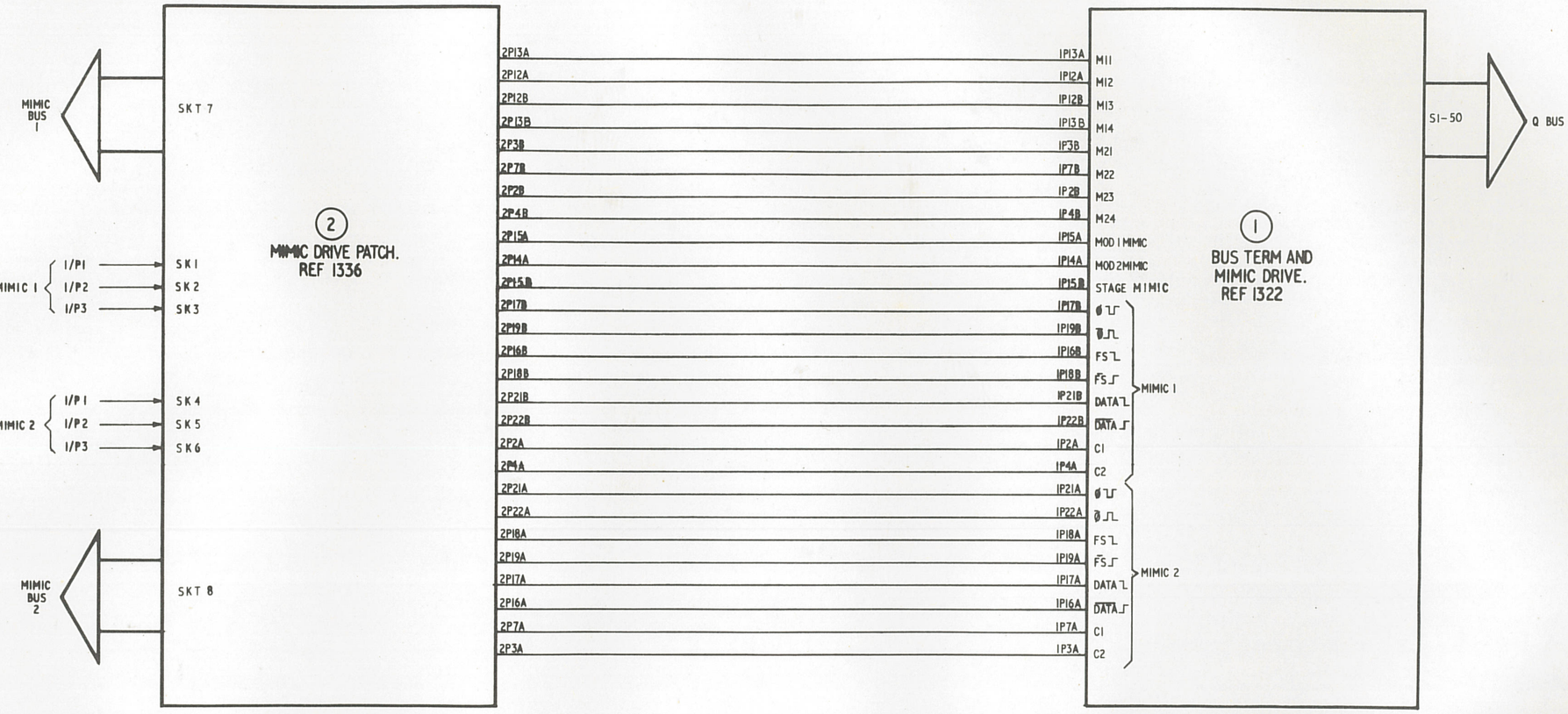

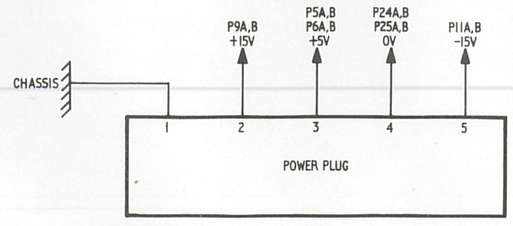

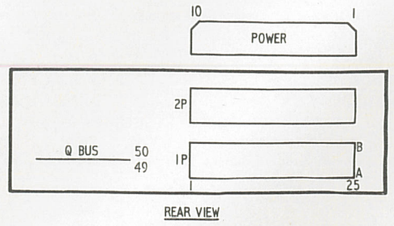

FIG. C2

REV.1. C.Nº 11890 Mimic 1 & 2 I/Ps. Added. Pin Nºs Corrected. RHS 19-11-74

REV.2. C.Nº E STAGE MIMIC. PIN Nº WAS. P14B. 14-1-75

CWG & S

RANK STRAND ELECTRIC
PO Box 70 Great West Road Brentford Middlesex TW8 9HR
Telephone 01-568 9222 Telex 24408
A DIVISION OF
RANK AUDIO VISUAL LIMITED

DIMENSIONS IN INCHES/MILLIMETRES
THIRD ANGLE PROJECTION

TOLERANCES	
IMPERIAL	METRIC
FRACTION ± 1/64"	1 DEC PLACE ± 0·4 mm
DECIMAL ± ·005"	2 DEC PLACE ± 0·1 mm
ANGULAR ± 0·25°	
UNLESS OTHERWISE STATED	
USED ON :-	

SCALE		DATE
DRAWN	C. COOPER	12.6.74
CHECKED	DAB	14/6/74
APPROVED	DAB	14/6/74
MATERIAL :-		
FINISH :-		

TITLE :-
MMS BUS TERMINATION AND MIMIC DRIVE MODULE.
WIRING DIAGRAM.

ISSUE A B C

DWG. Nº 7B14129

DWG. Nº 6A12397 | ISSUE ~~A~~ ~~B~~ C

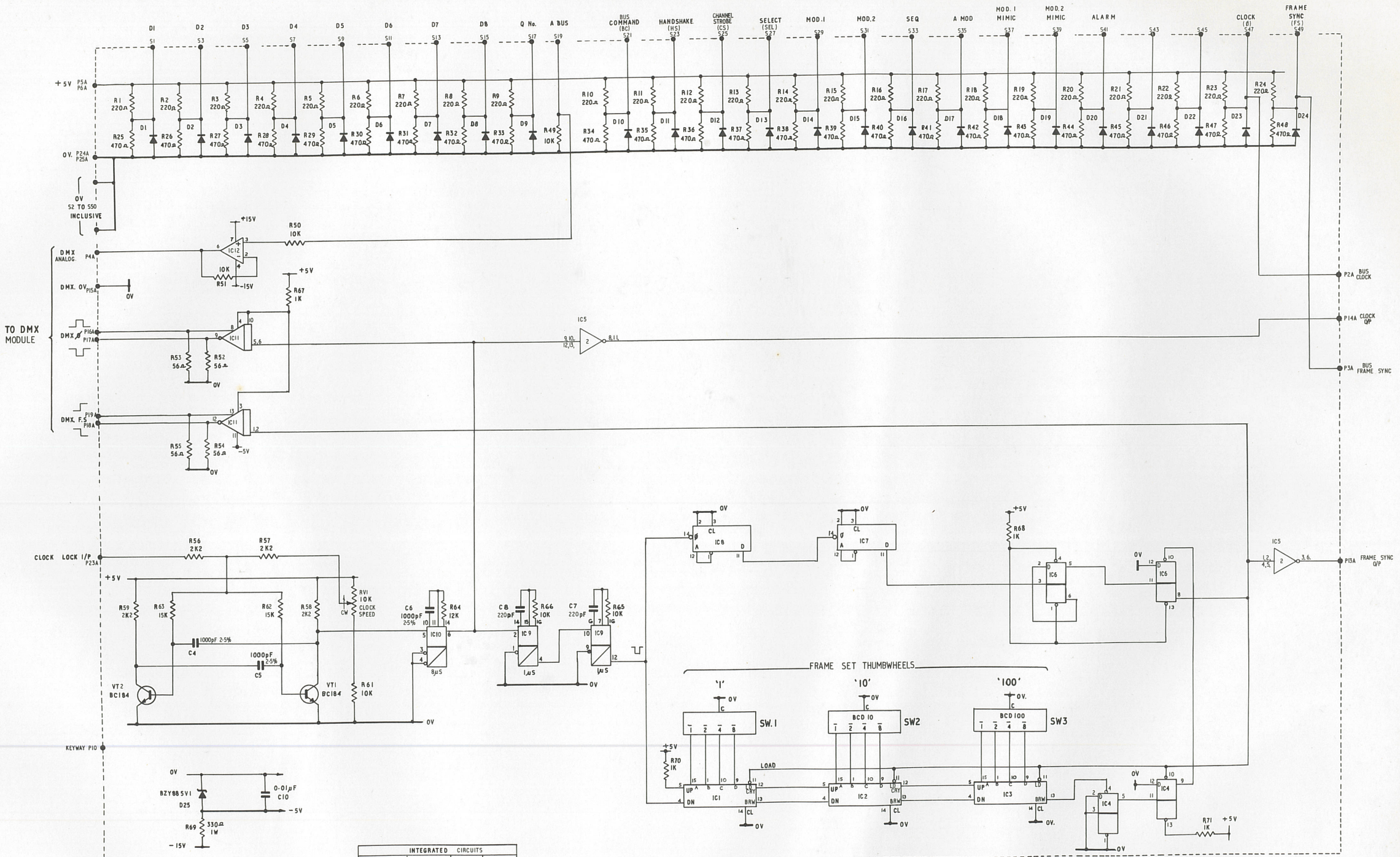

INTEGRATED CIRCUITS			
REF No.	TYPE	+Vcc 1	Gnd
IC5,	SN7438N	14	7
IC4, 6,	SN7474N	14	7
IC7, 8,	SN7493N	5	10
IC12,	SN72741P	——	——
IC10,	SN74121N	14	7
IC9,	SN74123N	16	8
IC1, 2, 3,	SN74192N	16	8
IC11,	SN75110N	14	7

NOTE
ALL DIODES ARE 1N914 UNLESS OTHERWISE STATED.

P.C. BOARD 5B12399
SCHEDULE 5S12398

FIG C3

REV. 1. C.Nº 21840 Pin Number Changes On IC9. 14-10-74 14-10-74

RANK STRAND ELECTRIC
P.O. Box 70 Great West Road Brentford Middlesex TW8 9HR
Telephone 01-568 9222 Telex 24408
A DIVISION OF
RANK AUDIO VISUAL LIMITED

DIMENSIONS IN INCHES/MILLIMETRES
THIRD ANGLE PROJECTION

TOLERANCES	
IMPERIAL	METRIC
FRACTION ± 1/64"	1 DEC PLACE ± 0.4 mm
DECIMAL ± .005"	2 DEC PLACE ± 0.1 mm
ANGULAR ± 0.25°	
UNLESS OTHERWISE STATED	
USED ON :-	

SCALE	—	DATE
DRAWN	G.A.N	11-6-73
CHECKED	D.R.B	11/6/74
APPROVED	D.R.B	11/6/74
MATERIAL :-		
FINISH :-		

TITLE :- MMS BUS TERMINATION CLOCK GEN. & DEMULTIPLEX DRIVE CARD.

REF 1317 PCB 2F7/1

ISSUE ~~A~~ ~~B~~ C | DWG. Nº 6A12397

DWG. Nº A B | ISSUE 6A12531

D1 S1 | D2 S3 | D3 S5 | D4 S7 | D5 S9 | D6 S11 | D7 S13 | D8 S15 | Q. No S17 | A/BUS S19 | (BC) BUS COMMAND S21 | (HS) HAND SHAKE S23 | (CS) CH STROBE S25 | (SEL) SELECT S27 | MOD 1 S29 | MOD 2 S31 | SEQ S33 | A/MOD S35 | MOD 1 MIMIC S37 | MOD 2 MIMIC S39 | ALARM S41 | S43 | S45 | (Ø) CLOCK S47 | (FS) FRAME SYNC S49

+5V

R1–R24 220Ω

R25–R48 470Ω

D1–D24

S2

SEC

EVEN Nos INCLUSIVE

CV LINK

0V

S50

R49 10K

R105 10K

IC13

+15V

-15V

R106 10K

R90 1K | R91 1K | R92 1K

INHIBITS

3 4 10 IC12 | 3 4 10 IC10 | 3 4 10 IC11

IC9

IC12 | IC11 | IC10

R93–R98 56Ω

P19B P17B P18B P16B P22B P21B P2A P4A

MIMIC 1 DATA | C1 | C2

P22A P21A P19A P18A P16A P17A

R99–R104 56Ω

Ø | FS | DATA

MIMIC 2 C1 | C2

R56 1K

R50 470Ω | R54 22K | R51 470Ω | R55 22K | VT2 | VT3 | R57 1K | R52 470Ω | C1 0·01μF | R53 470Ω | C2 0·01μF | 0V

IC3

IC4 | IC6 | IC7

MOD 1 MIMIC P15A

MOD 2 MIMIC P14A

IC7 | IC5

P15B

STAGE MIMIC

IC1 | VT1 | R72 1K | D25 | 0V

BZY88 5V1 D26 D27

C5 0·01μF | R85 10K | IC2 | R84 1K | R73 10K | RV1 10K | CW | SET STAGE MIMIC 'ON' LEVEL

+5V P5A,B P6A,B

+15V P9A,B

0V P24A,B P25A,B

-15V P11A,B

C12 22μF 25V | C11 22μF 25V | C10 0·01μF | C9 0·01μF | C14 TO C18 0·01μF | C13 22μF 25V

D28 D29 D30 BZY88 5V1

C8 C7 C6 0·01μF

R87 R88 R89 330Ω 1W

-5V IC12 PIN 11 | -5V IC10 PIN 11 | -5V IC11 PIN 11

IC5

R71 R70 R68 R69 1K

R74 R75 R77 2K2

R76 2K2

IC8 | IC9

R67 R66 R65 R64 1K

R78 R79 R80 R81 2K2

R62 1K

R58 470Ω | R83 22K | R59 470Ω | R82 22K | VT4 | VT5 | R63 1K | R60 470Ω | C3 0·01μF | R61 470Ω | C4 0·01μF | 0V

P7A P3A

P13A M11 | P12A M12 | P12B M13 | P13B M14

MIMIC 1 I/P's

P3B M21 | P7B M22 | P2B M23 | P4B M24

MIMIC 2 I/P's

ALL DIODES ARE IN914 UNLESS OTHERWISE STATED

ALL TRANSISTORS ARE BC184

INTEGRATED CIRCUITS

REF	TYPE	VCC	GND
IC5,9	DTL936	14	7
IC4,6,8,	SN7410N	14	7
IC3,	SN7420N	14	7
IC2,13,	SN72741P	—	—
IC10,11,12,	SN75110N	14	7
IC1,7	SN7414N	14	7

SCHEDULE 5S12532
P.C. BOARD 5A12533

FIG. C4

REV.| C.Nº

RANK STRAND ELECTRIC
PO Box 70 Great West Road Brentford Middlesex TW8 9HR
Telephone 01-568 9222 Telex 24408
A DIVISION OF
RANK AUDIO VISUAL LIMITED

DIMENSIONS IN INCHES/MILLIMETRES
THIRD ANGLE PROJECTION

TOLERANCES		SCALE		DATE
IMPERIAL	METRIC	DRAWN	T.T.C.	27.6.74
FRACTION ± 1/64"	1 DEC PLACE ± 0·4mm	CHECKED	[illegible]	4/8/74
DECIMAL ± ·005"	2 DEC PLACE ± 0·1mm	APPROVED	[illegible]	4/8/74
ANGULAR ± 0·25°		MATERIAL:-		
UNLESS OTHERWISE STATED		FINISH:-		
USED ON:-				

TITLE:-
MMS BUS TERMINATION & MIMIC DRIVE CARD CIRCUIT DIAGRAM.
PCB 292/1 REF 1322
ISSUE A B | DWG. Nº 6A12531

DWG. Nº 6B12751 | ISSUE ~~B~~ ~~C~~

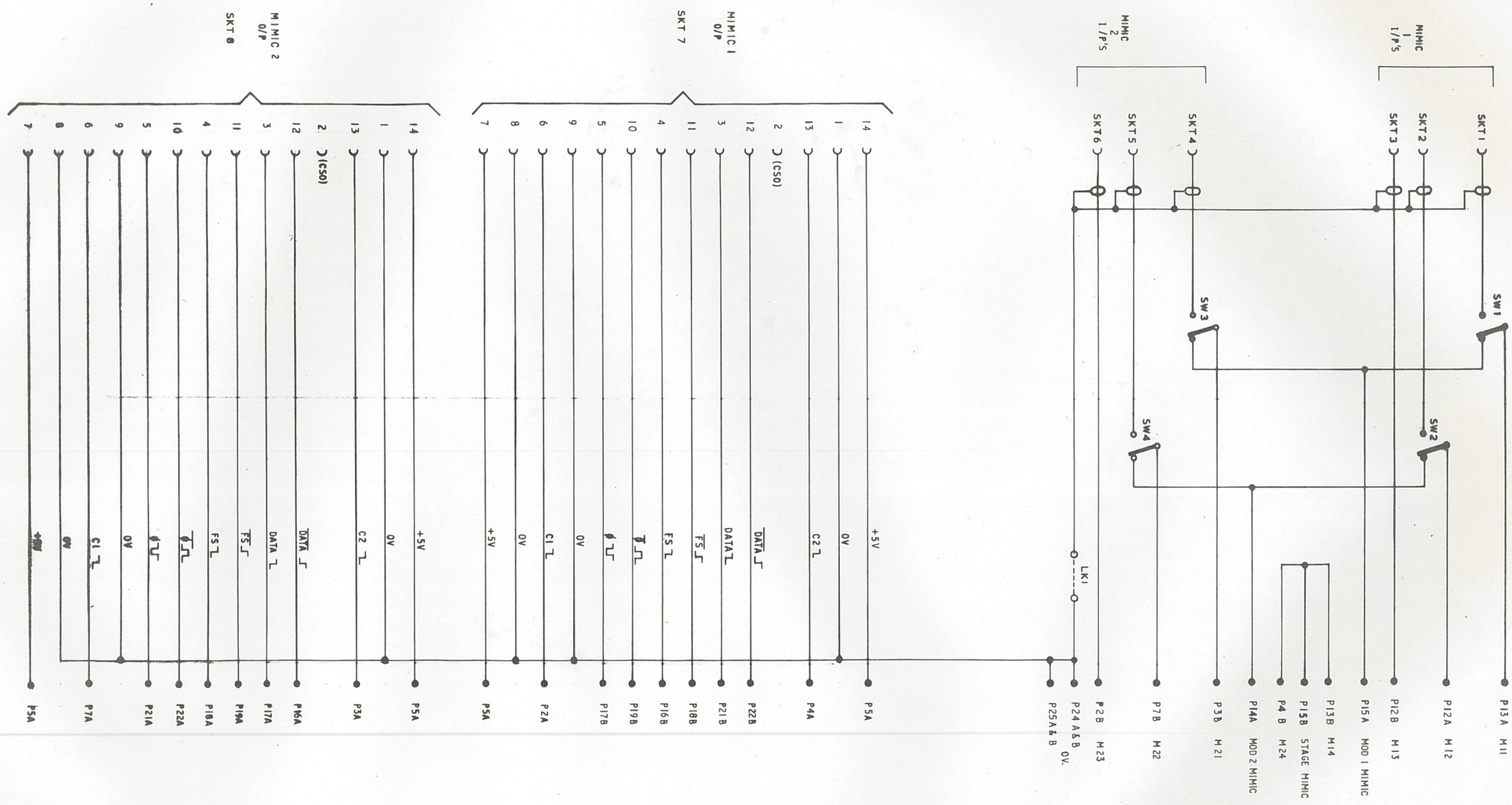

P C BOARD. 5B12753

SCHEDULE 5S12752

FIG. C5

REV. 1.	C. Nº
P13B	Was P4B
P14B	" P3B
P4B	" P15B
M21	" M23
M23	" M21
19-11-74	Roy 1/4

REV. 2.	C. Nº 1985
STAGE MIMIC	
PIN Nº WAS	
P14B.	
14.1.75	

RANK STRAND ELECTRIC
PO Box 70 Great West Road Brentford Middlesex TW8 9HR
Telephone 01-568 9222 Telex 24408
A DIVISION OF
RANK AUDIO VISUAL LIMITED

DIMENSIONS IN INCHES/MILLIMETRES
THIRD ANGLE PROJECTION

TOLERANCES	
IMPERIAL	METRIC
FRACTION ± 1/64"	1 DEC PLACE ± 0·4 mm
DECIMAL ± ·005"	2 DEC PLACE ± 0·1 mm
ANGULAR ± 0·25°	
UNLESS OTHERWISE STATED	
USED ON :-	

SCALE		DATE
DRAWN	GH	1.10.73
CHECKED	DRB	11/6/74
APPROVED	DRB	11/6/74
MATERIAL :-		
FINISH :-		

TITLE :- MMS MIMIC DRIVE PATCH CARD CIRCUIT DIAGRAM.

PCB 309/1 REF 1336.

ISSUE ~~B~~ ~~C~~ D | DWG. Nº 6B12751

DWG. Nº 7A12749 | ISSUE ~~B~~ C

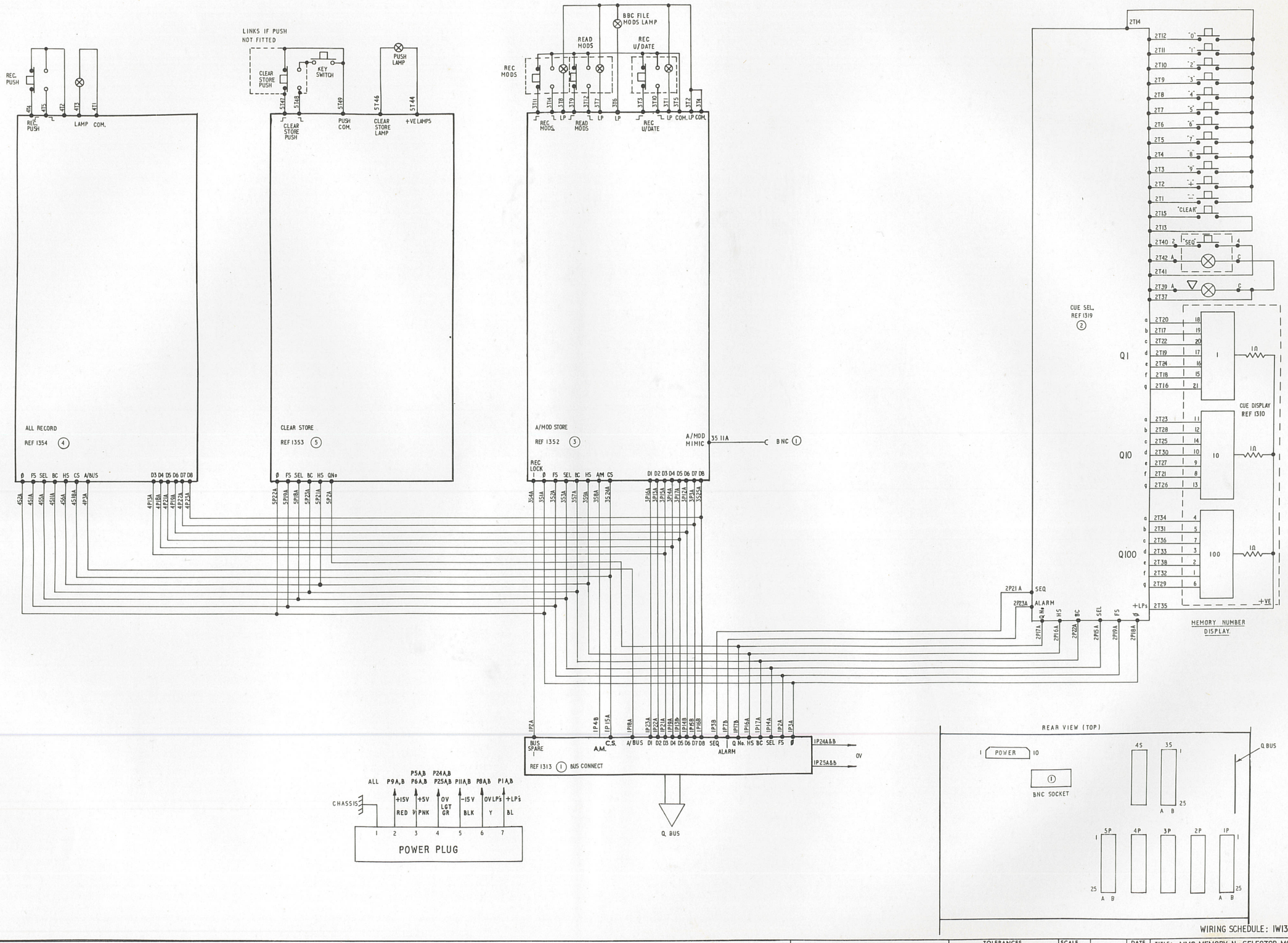

WIRING SCHEDULE: IW13487 | FIG. D1.

REV. 1. C.Nº 61896
Pin Numbers Altered. 19-11-74

RANK STRAND ELECTRIC
PO Box 70 Great West Road Brentford Middlesex TW8 9HR
Telephone 01-568 9222 Telex 24408
A DIVISION OF
RANK AUDIO VISUAL LIMITED

DIMENSIONS IN INCHES/MILLIMETRES
THIRD ANGLE PROJECTION

TOLERANCES		
IMPERIAL	METRIC	
FRACTION ± 1/64"	1 DEC PLACE ± 0·4 mm	
DECIMAL ± ·005"	2 DEC PLACE ± 0·1 mm	
ANGULAR ± 0·25°		
UNLESS OTHERWISE STATED		
USED ON :-		

SCALE		DATE
DRAWN	T.T.C.	28. 7. 73
CHECKED	D.R.B.	11/6/74
APPROVED	D.R.B.	11/6/74
MATERIAL :-		
FINISH :-		

TITLE :- MMS MEMORY No. SELECTOR MODULE (ADDRESS SELECTOR) WIRING DIAGRAM

ISSUE ~~B~~ C | DWG. Nº 7A12749

DWG. Nº 6BI2337	ISSUE A B

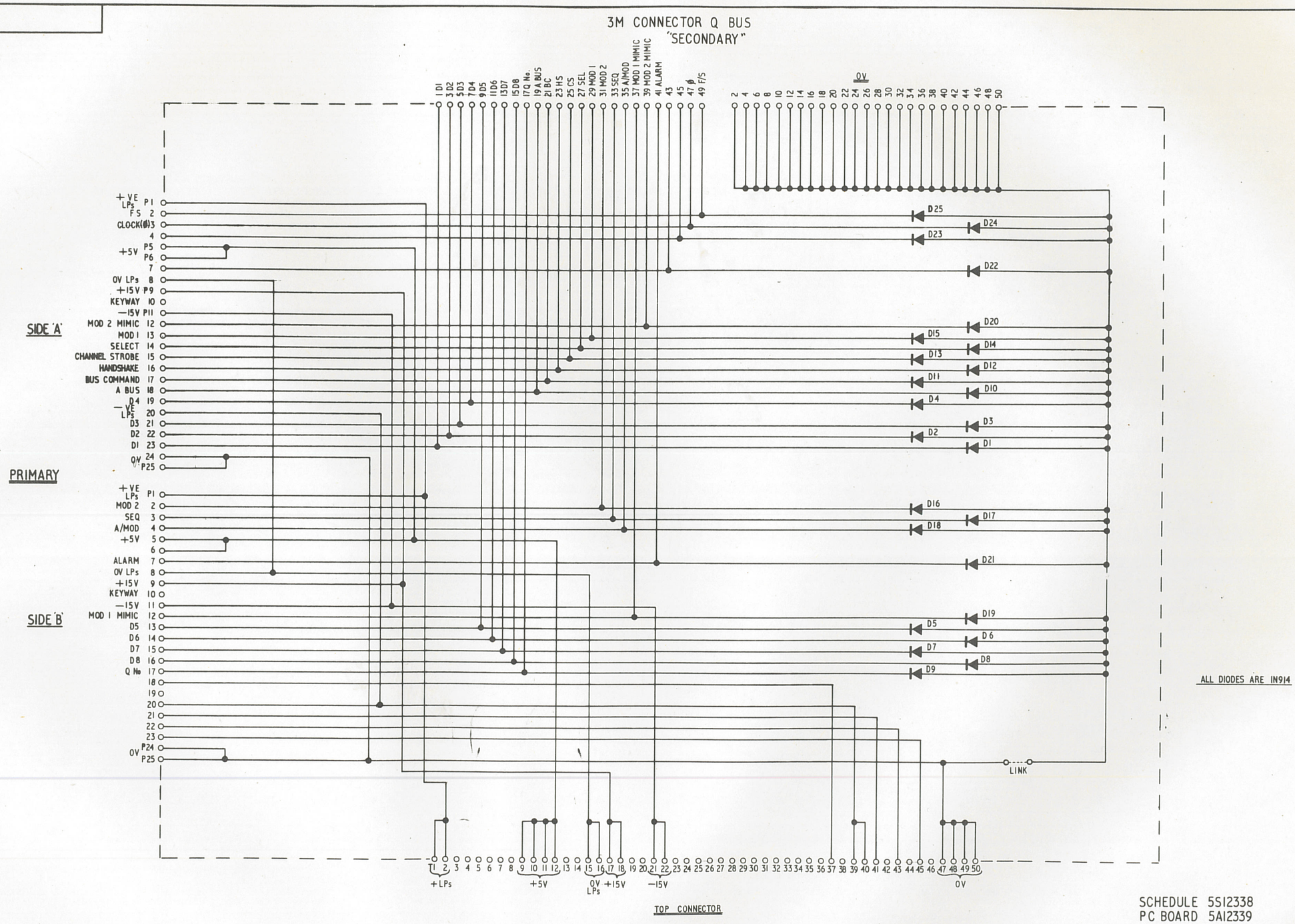

SCHEDULE 5SI2338
PC BOARD 5AI2339

FIG. D,E,F,G,H
J,M,R,S,Z.

REV.: C.Nº

RANK STRAND ELECTRIC
PO Box 70 Great West Road Brentford Middlesex TW8 9HR
Telephone 01-568 9222 Telex 24408
A DIVISION OF
RANK AUDIO VISUAL LIMITED

DIMENSIONS IN INCHES/MILLIMETRES
THIRD ANGLE PROJECTION

TOLERANCES	
IMPERIAL	METRIC
FRACTION ± 1/64"	1 DEC PLACE ± 0·4mm
DECIMAL ± ·005"	2 DEC PLACE ± 0·1mm
ANGULAR ± 0·25°	
UNLESS OTHERWISE STATED	
USED ON :-	

		DATE
SCALE		
DRAWN	T.T.C.	26·7·73
CHECKED	D.R.L.	4/8/74
APPROVED	D.R.L.	4/8/74
MATERIAL :-		
FINISH :-		

TITLE :-
MMS MODULE BUS CONNECT CARD
CIRCUIT DIAGRAM
REF 1313 PCB 277/3

ISSUE A B | DWG. Nº 6BI2337

DWG. Nº 6C12334	ISSUE ~~A~~ B C

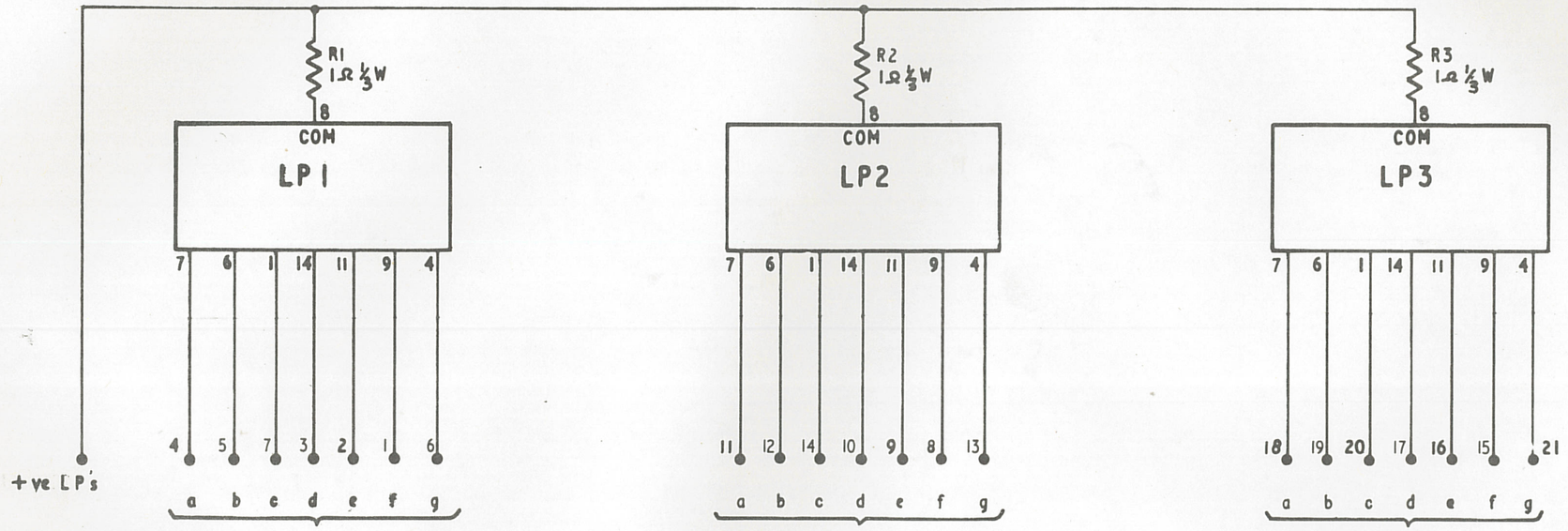

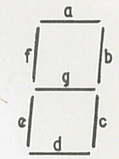

LETTERED SEGMENTS
AS FOR SN 7447N.

NOTE:
ALL LP's ARE KGM MS 141

PC BOARD DRG. No. 5C12336
SCHEDULE 5S12335

FIG. D, E, F, G, H
J, M, R, S, 3

REV.1 C.Nº
C.Nº E/935.
1 OHM RESISTOR
WAS 10HM. ½W.
19.12.74

RANK STRAND ELECTRIC
PO Box 70 Great West Road Brentford Middlesex TW8 9HR
Telephone 01-568 9222 Telex 24408
A DIVISION OF
RANK AUDIO VISUAL LIMITED

DIMENSIONS IN INCHES/MILLIMETRES
THIRD ANGLE PROJECTION

TOLERANCES	
IMPERIAL	METRIC
FRACTION ± 1/64"	1 DEC PLACE ± 0·4mm
DECIMAL ± ·005"	2 DEC PLACE ± 0·1mm
ANGULAR ± 0·25°	
UNLESS OTHERWISE STATED	
USED ON:-	

SCALE	—	DATE
DRAWN	G. HAYWARD	18·4·75
CHECKED		14.5.74
APPROVED		14/5/74
MATERIAL:-		
FINISH:-		

TITLE:-
MMS DISPLAY CARD
CIRCUIT DIAGRAM.
PCB 272 REF 1310

ISSUE ~~A~~ B C
DWG. Nº 6C12334

CWG 8.8.

DWG. Nº 6A12407 | ISSUE ~~A~~ ~~B~~ C

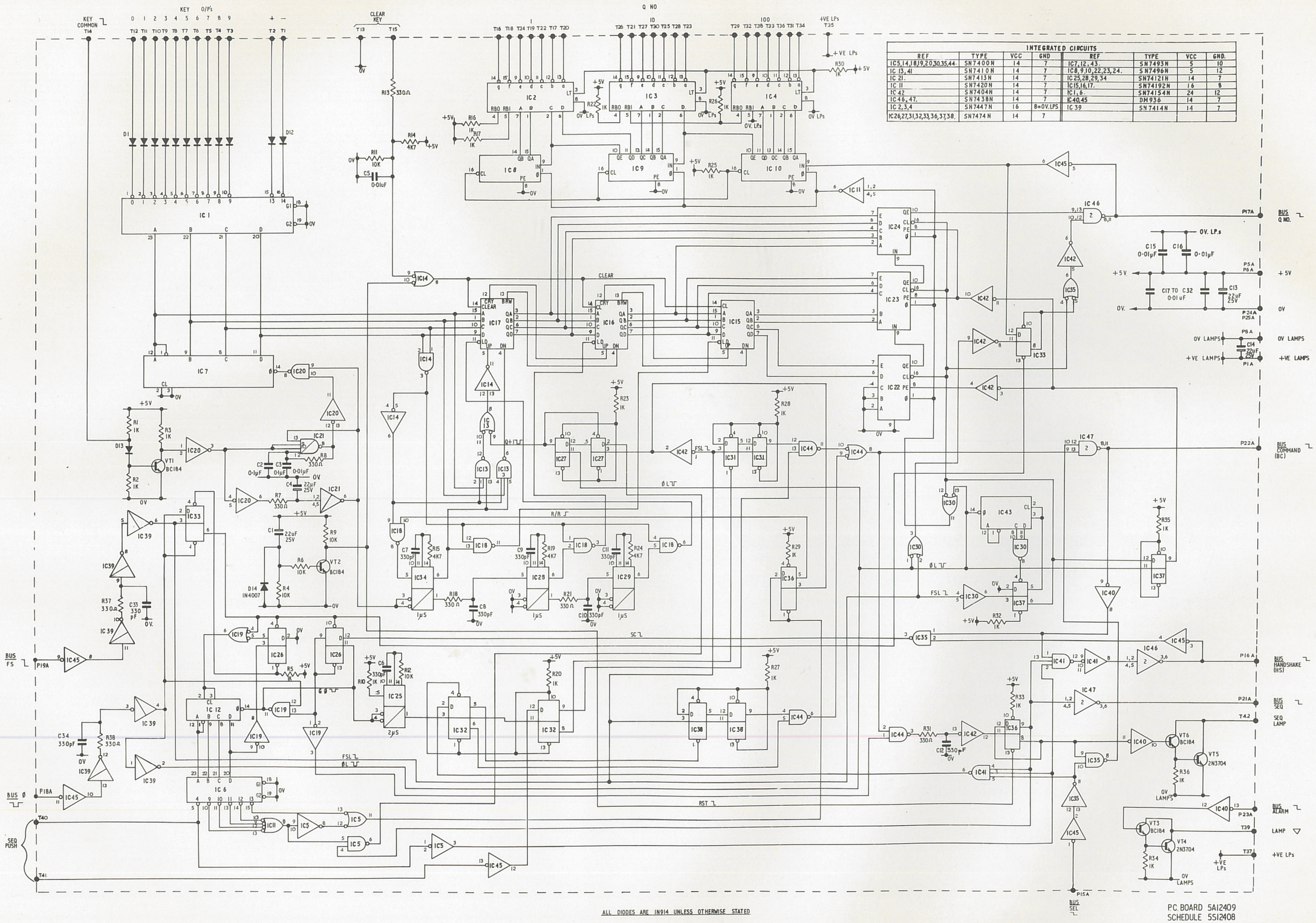

INTEGRATED CIRCUITS							
REF	TYPE	VCC	GND	REF	TYPE	VCC	GND.
IC5,14,18,19,20,30,35,44.	SN7400N	14	7	IC7,12,43.	SN7493N	5	10
IC 13,41	SN7410N	14	7	IC8,9,10,22,23,24.	SN7496N	5	12
IC 21.	SN7413N	14	7	IC25,28,29,34	SN74121N	14	7
IC 11	SN7420N	14	7	IC15,16,17.	SN74192N	16	8
IC 42	SN7404N	14	7	IC1,6.	SN74154N	24	12
IC46,47.	SN7438N	14	7	IC40,45	DM936	14	7
IC 2,3,4	SN7447N	16	8=OV.LPS	IC 39	SN7414N	14	7
IC26,27,31,32,33,36,37,38.	SN7474N	14	7				

ALL DIODES ARE IN914 UNLESS OTHERWISE STATED

P.C. BOARD 5A12409
SCHEDULE 5S12408

FIG. D4

REV. 1. C.Nº

RANK STRAND ELECTRIC
PO Box 70 Great West Road Brentford Middlesex TW8 9HR
Telephone 01-568 9222 Telex 24408
A DIVISION OF
RANK AUDIO VISUAL LIMITED

DIMENSIONS IN INCHES/MILLIMETRES
THIRD ANGLE PROJECTION

TOLERANCES	
IMPERIAL	METRIC
FRACTION ± 1/64"	1 DEC PLACE ± 0·4 mm
DECIMAL ± ·005"	2 DEC PLACE ± 0·1 mm
ANGULAR ± 0·25°	
UNLESS OTHERWISE STATED	
USED ON :-	

SCALE		DATE
DRAWN	TTC	22-8-73
CHECKED	PRB	11/6/74
APPROVED	DRB	11/6/74
MATERIAL :-		
FINISH :-		

TITLE :- MMS MEMORY No. SELECTOR MODULE
(ADDRESS SELECTOR)
CUE SELECT CARD
CIRCUIT DIAGRAM
P.C.B 288/3 REF 1319

ISSUE ~~A~~ ~~B~~ C | DWG. Nº 6A12407

DWG. Nº 6A13638 | ISSUE C

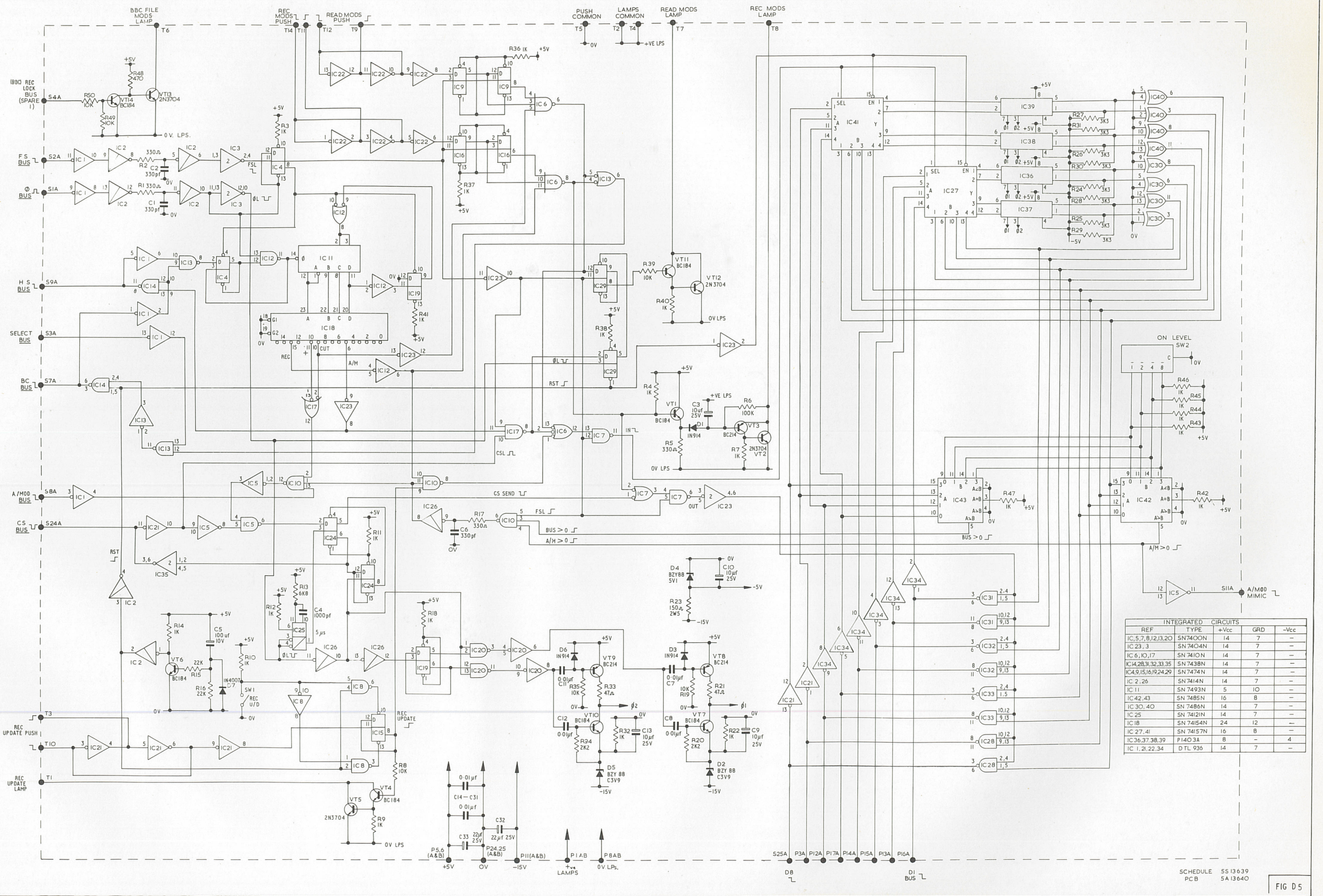

INTEGRATED CIRCUITS				
REF	TYPE	+Vcc	GRD	-Vcc
IC,5,7,8,12,13,20	SN7400N	14	7	–
IC 23, 3	SN7404N	14	7	–
IC 6,10,17	SN7410N	14	7	–
IC14,28,31,32,33,35	SN7438N	14	7	–
IC4,9,15,16,19,24,29	SN7474N	14	7	–
IC 2,26	SN7414N	14	7	–
IC 11	SN7493N	5	10	–
IC 42,43	SN7485N	16	8	–
IC 30, 40	SN7486N	14	7	–
IC 25	SN74121N	14	7	–
IC 18	SN74154N	24	12	–
IC 27,41	SN74157N	16	8	–
IC 36,37,38,39	P1403A	8	–	4
IC 1,21,22,34	DTL 936	14	7	–

SCHEDULE 5S13639
PCB 5A13640

FIG D5

REV. 1. C.Nº

RANK STRAND ELECTRIC
PO Box 70 Great West Road Brentford Middlesex TW8 9HR
Telephone 01-568 9222 Telex 24408
A DIVISION OF
RANK AUDIO VISUAL LIMITED

DIMENSIONS IN INCHES/MILLIMETRES
THIRD ANGLE PROJECTION

TOLERANCES		
IMPERIAL	METRIC	
FRACTION ± 1/64"	1 DEC PLACE ± 0·4 mm	
DECIMAL ± ·005"	2 DEC PLACE ± 0·1 mm	
ANGULAR ± 0·25°		
UNLESS OTHERWISE STATED		
USED ON:-		

SCALE		DATE
DRAWN	D.L.G	3-4-74
CHECKED	D.L.G	11/4/74
APPROVED	DLG	11/4/74
MATERIAL:-		
FINISH:-		

TITLE:- MMS 'MODULE' CARD
A/MOD
REF 1352
PCB 333/2

ISSUE C | DWG. Nº 6A13638

DWG. Nº 6A13641 | ISSUE ~~A~~ ~~B~~ C

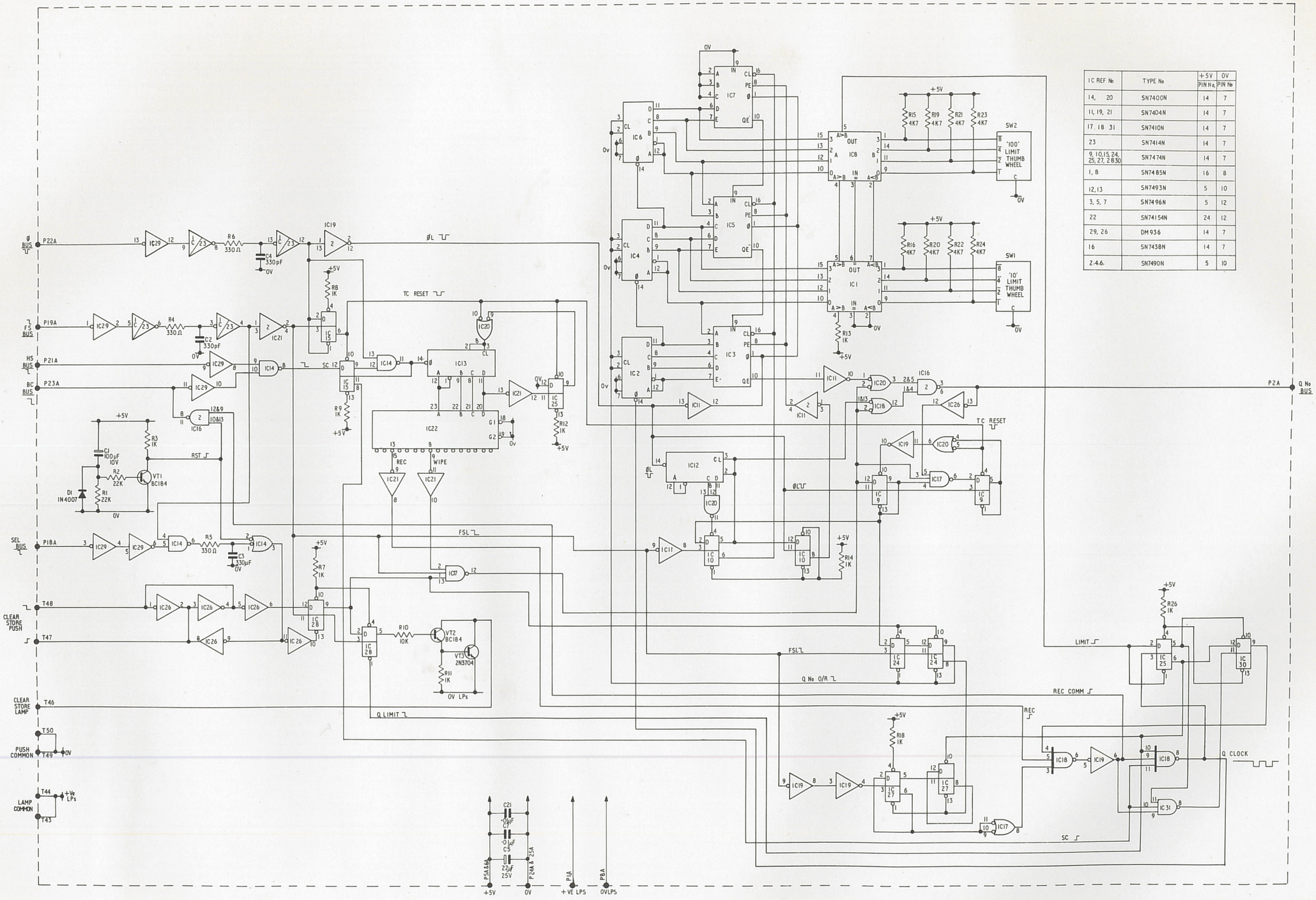

IC REF No	TYPE No	+5V PIN No.	0V PIN No
14, 20	SN7400N	14	7
11, 19, 21	SN7404N	14	7
17 18 31	SN7410N	14	7
23	SN7414N	14	7
9, 10, 15, 24, 25, 27, 28 30	SN7474N	14	7
1, 8	SN7485N	16	8
12, 13	SN7493N	5	10
3, 5, 7	SN7496N	5	12
22	SN74154N	24	12
29, 26	DM936	14	7
16	SN7438N	14	7
2.4.6.	SN7490N	5	10

SCHEDULE 5S13642
PC BOARD 5A13643

FIG. D6

REV. 1. C. Nº E2058
IC17/11 WAS CONNECTED TO IC27/8, 12. 27-2-75 C.M.C.

RANK STRAND ELECTRIC
PO Box 70 Great West Road Brentford Middlesex TW8 9HR
Telephone 01-568 9222 Telex 24408
A DIVISION OF
RANK AUDIO VISUAL LIMITED

DIMENSIONS IN INCHES/MILLIMETRES
THIRD ANGLE PROJECTION

TOLERANCES				
IMPERIAL	METRIC	SCALE		DATE
FRACTION ± 1/64"	1 DEC PLACE ± 0·4 mm	DRAWN	T.T.C.	23-2-74
DECIMAL ± ·005"	2 DEC PLACE ± 0·1 mm	CHECKED	D R B	11/6/74
ANGULAR ± 0·25°		APPROVED	D.R.B.	11/6/74
UNLESS OTHERWISE STATED		MATERIAL:-		
USED ON:-		FINISH:-		

TITLE:- MMS MEMORY No. SELECTOR MODULE (ADDRESS SELECTOR) CLEAR STORE CARD CIRCUIT DIAGRAM

PCB 334/1 REF 1353

ISSUE ~~A~~ ~~B~~ C | DWG. Nº 6A13641

DWG. Nº 6A13504 | ISSUE C

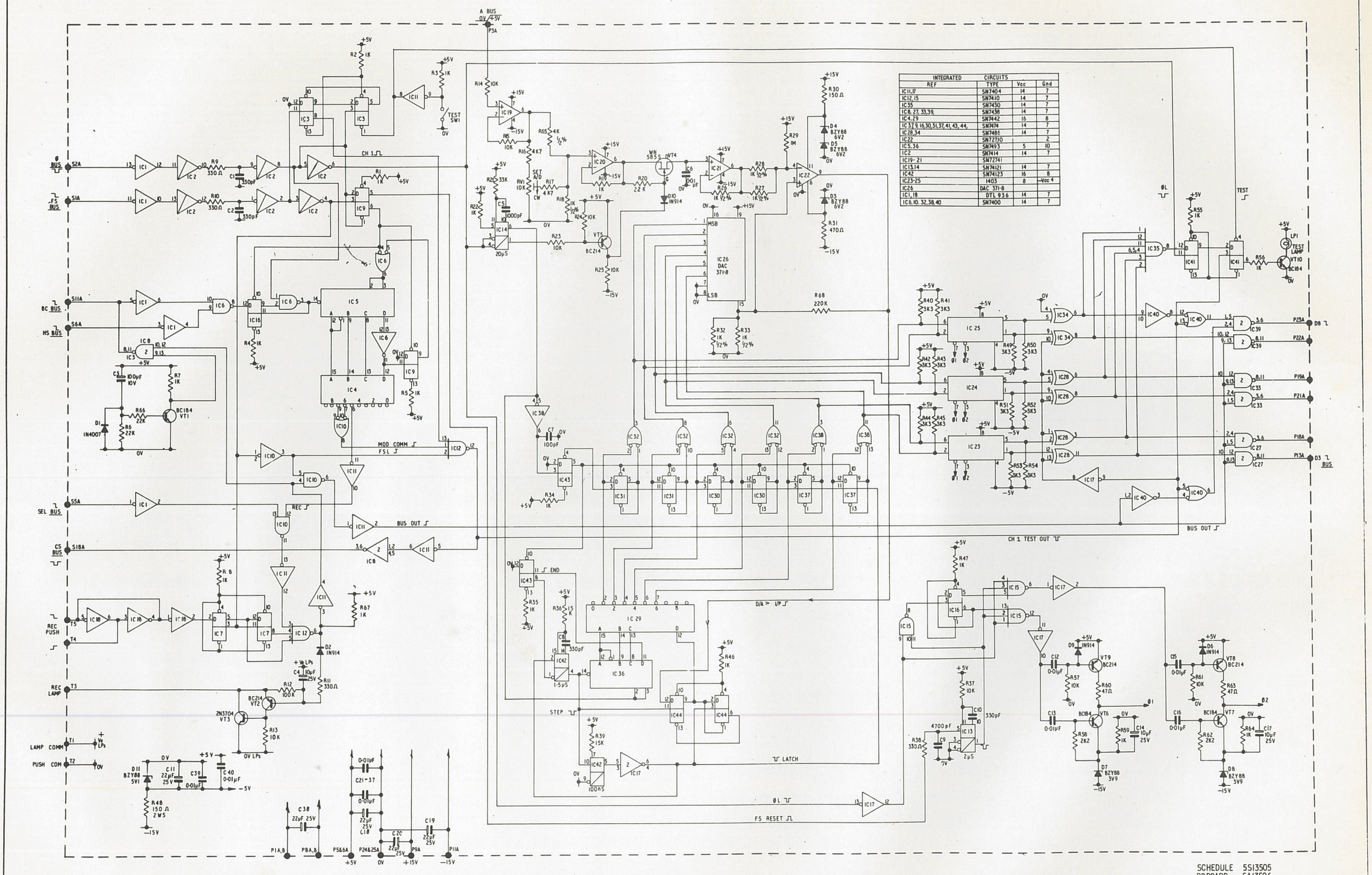

INTEGRATED CIRCUITS			
REF	TYPE	Vcc	Gnd
IC11,17	SN7404	14	7
IC12,15	SN7410	14	7
IC35	SN7430	14	7
IC8, 27, 33,39,	SN7438	14	7
IC4,29	SN7442	16	8
IC3,7,9, 16,30,31,37,41,43,44,	SN7474	14	7
IC28,34	SN7486	14	7
IC22	SN72710		2
IC5,36	SN7493	5	10
IC2	SN7414	14	7
IC19-21	SN72741		
IC13,14	SN74121	14	7
IC42	SN74123	16	8
IC23-25	1403	8	-Vcc 4
IC26	DAC 371-8		
IC1,18	DTL 936	14	7
IC6,10, 32,38,40	SN7400	14	7

SCHEDULE 5S13505
P.C.BOARD 5A13506

FIG D7

REV.1. C.Nº 82296
C11 WAS 10μF 25V
C39,40 ADDED
CMC 11-11-75

RANK STRAND ELECTRIC
A DIVISION OF
RANK AUDIO VISUAL LIMITED

DIMENSIONS IN INCHES MILLIMETRES
THIRD ANGLE PROJECTION

TOLERANCES		
IMPERIAL	METRIC	
FRACTION ± 1/64"	1 DEC PLACE ± 0.4mm	
DECIMAL ± .005"	2 DEC PLACE ± 0.1mm	
ANGULAR ± 0.25		
UNLESS OTHERWISE STATED		
USED ON		

SCALE		DATE
DRAWN	T.T.C.	2-4-74
CHECKED	DAB	18/6/74
APPROVED	DAB	18/6/74
MATERIAL		
FINISH		

TITLE:-
MMS ALL RECORD CARD
CIRCUIT DIAGRAM

PCB329/2 REF1354

ISSUE C | DWG. Nº 6A13504

DWG. Nº 6A16785 | ISSUE A

INTEGRATED CIRCUITS			
REF	TYPE	Vcc	Gnd
IC11,17	SN7404	14	7
IC12,15	SN7410	14	7
IC35	SN7430	14	7
IC6,27,33,39	SN7438	14	7
IC4,29	SN7442	16	8
IC3,7,9,16,30,31,37,41,43,44	SN7474	14	7
IC28,34	SN7486	14	7
IC22	SN72710	2	
IC5,36	SN7493	5	10
IC2	SN7414	14	7
IC19-21	SN72741		
IC13,14	SN74121	14	7
IC42	SN74123	16	8
IC23-25	1403	8	-Vcc 4
IC26	DAC 371-8		
IC1,18	DTL 936	14	7
IC6 10 32 38 40	SN7400	14	7

SCHEDULE 5S16786
P.C.BOARD 5A16787

FIG. DD7, Q9

RANK STRAND ELECTRIC
A DIVISION OF RANK AUDIO VISUAL LIMITED
DIMENSIONS IN INCHES MILLIMETRES
THIRD ANGLE PROJECTION

TOLERANCES: IMPERIAL | METRIC
SCALE | DRAWN | CHECKED | APPROVED | MATERIAL | FINISH | DATE

TITLE: MMS ALL RECORD CARD Mk II CIRCUIT DIAGRAM
PCB 485 REF 1511
ISSUE A DWG. Nº 6A16785

DWG. Nº 7A 13091 | ISSUE ~~A~~ ~~B~~ C

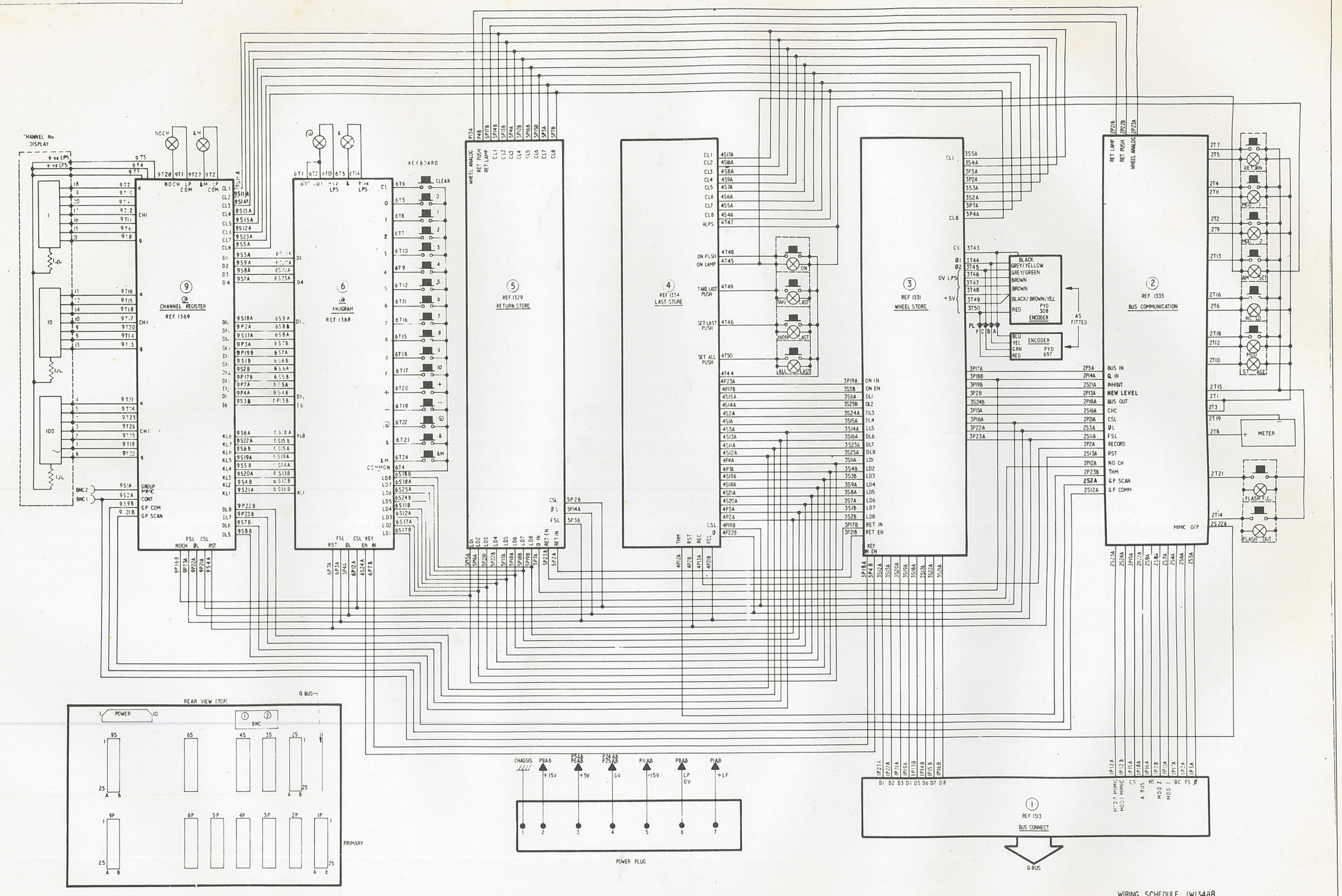

NB MODULE HAS ADDITIONAL WIRING TO ALLOW CONVERSION TO B OR K CHANNEL CONTROLLERS

WIRING SCHEDULE: IW13488

FIG F1

REV 1 C Nº 22205 Set Last, Push Changed To Indiv Last, Push. Set All, Push Changed To All Last, Push. 19-6-75

REV 2 CH No E2289 PL & SKT CONNECTIONS ADDED TO ENCODER 16.1.76

RANK STRAND ELECTRIC
A DIVISION OF RANK AUDIO VISUAL LIMITED

THIRD ANGLE PROJECTION

TOLERANCES		SCALE	DATE
IMPERIAL	METRIC	DRAWN	
FRACTION ± 1/64	1 DEC PLACE ± 0.4 mm	CHECKED	13.1.75
DECIMAL ± .005	2 DEC PLACE ± 0.1 mm	APPROVED	
ANGULAR ± 0.25°		MATERIAL	
UNLESS OTHERWISE STATED			

TITLE: MMS @K CHANNEL CONTROL MODULE WIRING DIAGRAM

ISSUE ~~A~~ ~~B~~ C | DWG. Nº 7A 13091

DWG. Nº 6BI2337	ISSUE A B

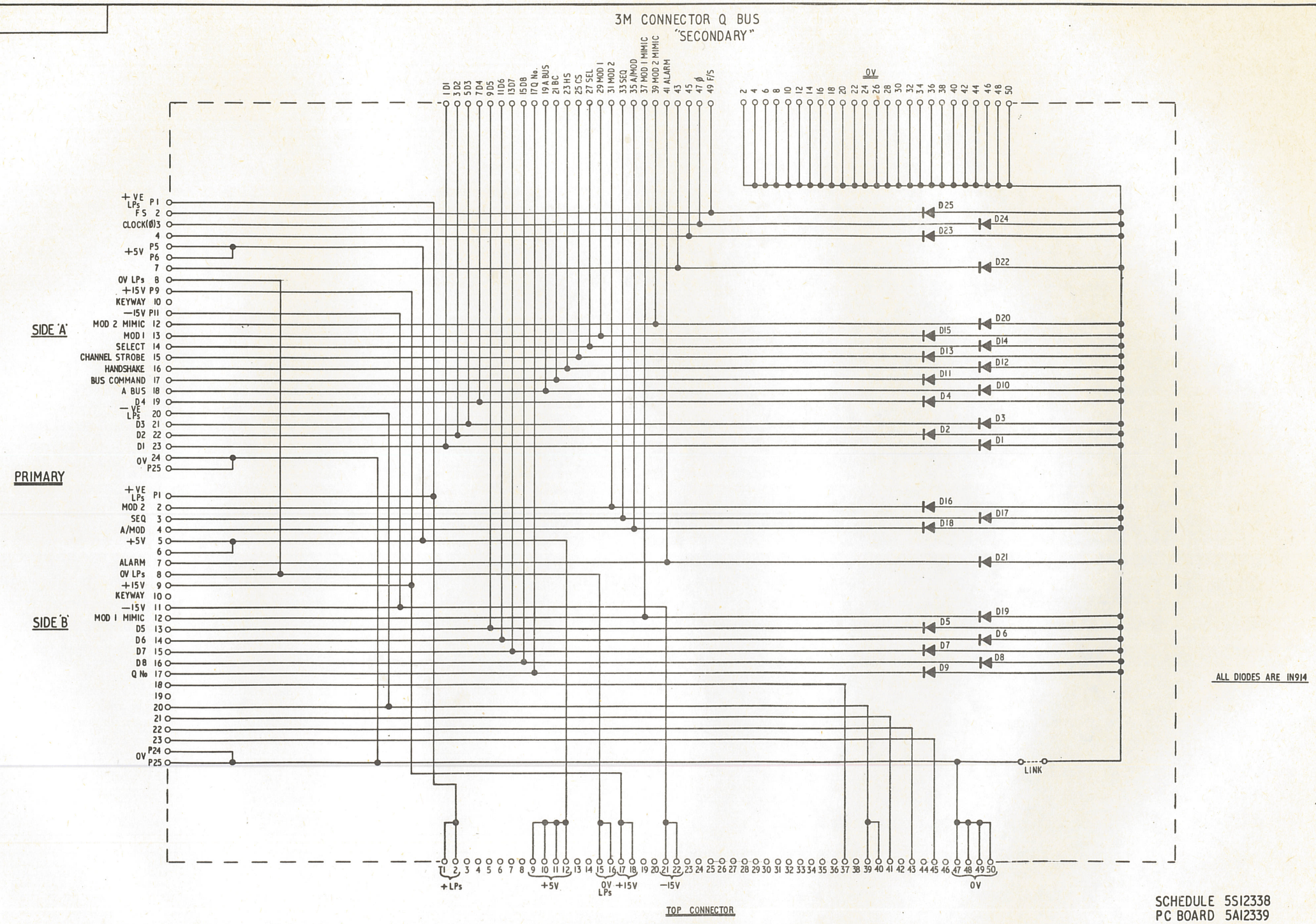

ALL DIODES ARE IN914

SCHEDULE 5SI2338
PC BOARD 5AI2339

FIG. D.E.F.G.H
J.M.R.S.2.

REV.I. C.Nº

RANK STRAND ELECTRIC
PO Box 70 Great West Road Brentford Middlesex TW8 9HR
Telephone 01-568 9222 Telex 24408
A DIVISION OF
RANK AUDIO VISUAL LIMITED

DIMENSIONS IN INCHES/MILLIMETRES
THIRD ANGLE PROJECTION

TOLERANCES		SCALE		DATE
IMPERIAL	METRIC	DRAWN	T.T.C.	26·7·73
FRACTION ± 1/64"	1 DEC PLACE ± 0·4mm	CHECKED	D.H.	4/6/74
DECIMAL ±·005"	2 DEC PLACE ± 0·1 mm	APPROVED	D.H.	4/6/74
ANGULAR ± 0·25°		MATERIAL:-		
UNLESS OTHERWISE STATED				
USED ON:-		FINISH:-		

TITLE:-
MMS MODULE BUS CONNECT CARD
CIRCUIT DIAGRAM
REF 1313 PCB 277

ISSUE AB | DWG. Nº 6BI2337

DWG. Nº 6C12334	ISSUE ~~A~~ ~~B~~ C

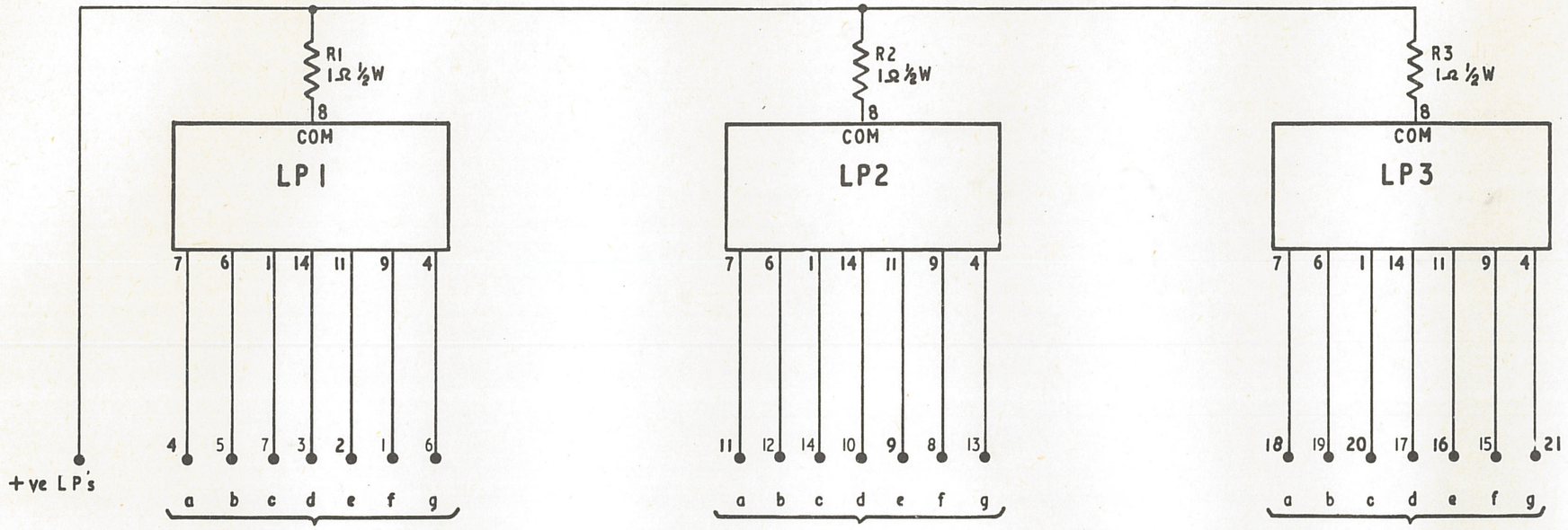

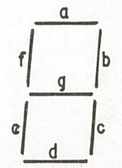

LETTERED SEGMENTS
AS FOR SN7447N.

NOTE:
ALL LPs ARE KGM MS 141

PC BOARD DRG. No. 5C12336
SCHEDULE 5S12335

FIG. D, E, F, G, H
J, M, R, S, 3

REV.1. C.N°:

RANK STRAND ELECTRIC
PO Box 70 Great West Road Brentford Middlesex TW8 9HR
Telephone 01-568 9222 Telex 24408
A DIVISION OF
RANK AUDIO VISUAL LIMITED

DIMENSIONS IN INCHES/MILLIMETRES
THIRD ANGLE PROJECTION

TOLERANCES	
IMPERIAL	METRIC
FRACTION ± 1/64"	1 DEC PLACE ± 0·4mm
DECIMAL ± ·005"	2 DEC PLACE ± 0·1mm
ANGULAR ± 0·25°	
UNLESS OTHERWISE STATED	

USED ON:-

SCALE	—	DATE
DRAWN	B HOWARD	18·4·73
CHECKED		14.5.74
APPROVED		14/5/74

MATERIAL:-

FINISH:-

TITLE:-
MMS DISPLAY CARD
CIRCUIT DIAGRAM.
PCB 272 REF 1310

ISSUE ~~A~~ ~~B~~ C

DWG. Nº 6C12334

DWG. Nº 6AI2960 | ISSUE B&D&E

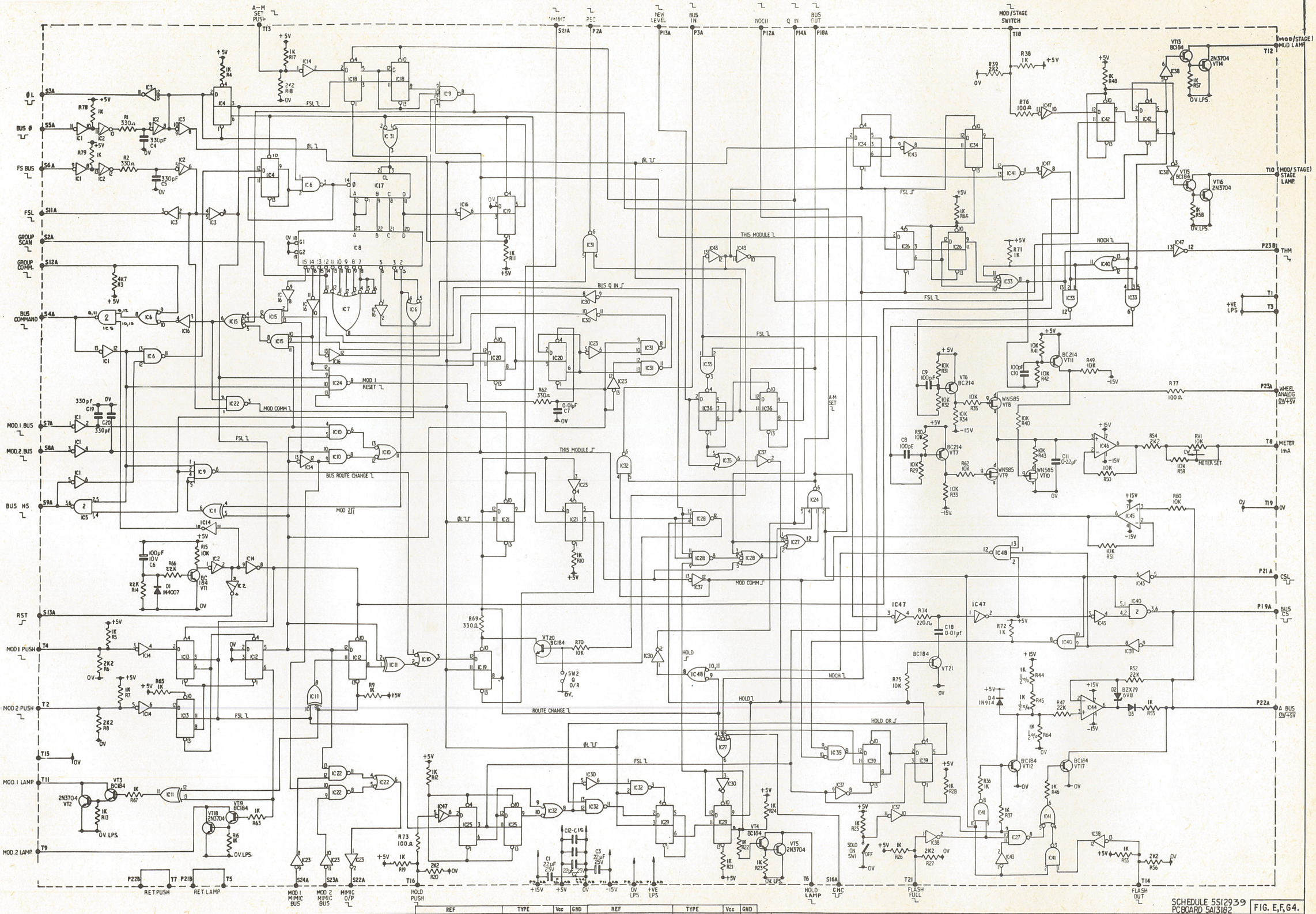

REF	TYPE	Vcc	GND	REF	TYPE	Vcc	GND
IC6,10.31,35. 41,22,32.	SN7400N	14	7	IC5,40	SN7438N	14	7
IC16,23,30,37,43.	SN7404N	14	7	IC4,12,13,18,19,20,21,25,26,29,34,36	SN7474N	14	7
IC 15,27,28,33,48	SN7410N	14	7	IC11	SN7486N	14	7
IC2 47	SN 7414N	14	7	IC17	SN7493N	5	10
IC24,9	SN7420N	14	7	IC8	SN74154N	24	12
IC7	SN930	14	7	IC1,14,38,	DTL 930	14	7

RANK STRAND ELECTRIC
PO Box 70 Great West Road Brentford Middlesex TW8 9HR
Telephone 01-568 9222 Telex 24408
A Division of
RANK AUDIO VISUAL LIMITED

DIMENSIONS IN INCHES/MILLIMETRES

TOLERANCES	
IMPERIAL	METRIC
FRACTION ± 1/64"	1 DEC PLACE ± 0·4 mm
DECIMAL ± 005"	2 DEC PLACE ± 0·1 mm
ANGULAR ± 0·25°	
UNLESS OTHERWISE STATED	

USED ON:- LU2560

SCALE		DATE
DRAWN	G.W.F	3.1.74
CHECKED		
APPROVED		
MATERIAL:-		
FINISH:-		

TITLE:-
MMS CHANNEL CONTROL MODULE
BUS COMMUNICATION
CIRCUIT DIAGRAM REF1335 PCB 311/4

ISSUE B&D&E | DWG. Nº6AI2960

SCHEDULE 5SI2939
PCBOARD 5AI3182

FIG. E,F,G4.

DWG. Nº 6AI2733 | ISSUE A B C D E F

REF.	TYPE	Vcc	GND	Vee
IC11, 12, 13	DTL 936	14	7	
IC19, 20, 22, 23, 37,	P1403A	8		4
IC 3, 41.	SN 7400N	14	7	
IC14, 15.	SN 74C1N	14	7	
IC1, 16, 17, 18, 44, 51.	SN 7404N	14	7	
IC50	SN 74H0N	14	7	
IC4 , 40.	SN 7420N	14	7	
IC9, 10, 48, 49.	SN 7438N	14	7	
IC 38 39	SN7442N	16	8	
IC5, 6, 7, 8, 42, 43, 46.	SN 7474N	14	7	
IC 27, 29	SN 7475N	5	12	
IC 31, 32, 35.47	SN 7486N	14	7	
IC 28, 30.	SN74193N	16	8	
IC2, 45.	SN74121N	14	7	
IC 21, 24, 25, 26	SN74157N	16	8	
IC 33, 34.	SN 741BIN	24	12	
IC36	SN7414N	14	7	
IC2.	SN74123N	16	8	

FIG. E.F. G5

RANK STRAND ELECTRIC
A DIVISION OF
RANK AUDIO VISUAL LIMITED

TOLERANCES		SCALE	–	DATE
IMPERIAL	METRIC	DRAWN	K. A. DONOVAN	18 SEPT. 73
FRACTION ± 1/64"	1 DEC PLACE ± 0·4 mm	CHECKED		
DECIMAL ± ·005"	2 DEC PLACE ± 0·1 mm	APPROVED		
ANGULAR ± 0·25°		MATERIAL:–		
UNLESS OTHERWISE STATED				
USED ON:–		FINISH:–		

DIMENSIONS IN INCHES/MILLIMETRES

TITLE:–
MMS CHANNEL CONTROL MODULE
WHEEL STORE CARD
CIRCUIT DIAGRAM
P.C.B. 304/5 REF. 1331
ISSUE A B C D E F DWG Nº 6AI2733

REV. J. C.N.T. 11562
REV. H. C.N.T. 11548 R56 WAS 10K
REV. G. C.N.T. 11523 D.L.L.
REV. F. C.N.T. 11503 D.L.L.
REV. E. C.N.T. 11496 C.H.L.
REV. D. C41/4 WAS 22 S1/4
NEW 100K P.B. 0A6

DWG. Nº 6A12737 | ISSUE C D E F

INTEGRATED CIRCUITS				
REF	TYPE	VCC	VDD	GND
IC33,34,36,38	SN7400N	14		7
IC20,21	SN7401N	14		7
IC1,2,12,35,37,41	SN7404N	14		7
IC31	SN7410N	14		7
IC24,39	SN7420N	14		8
IC23,25	SN7442N	16		8
IC22,26,27,28,29,32,40	SN7474N	14		7
IC7,8	SN74LS75N	5		12
IC13,14	SN7485N	16		8
IC9,10,11,15	SN74157N	16		8
IC30	DM936	14		7
IC3,4,5,6,16,17,18,19	P1403A			

SCHEDULE 5S12738
P.C. BOARD 5A12739

FIG. E,F.66.

REV.	C.N°.	DETAILS	BY	CHK	APP'D
REV C	E2205	Notation Alterations, ie 'Indiv Last' Push previously 'Set Last' Push, 'All Last' Push previously 'Set All' Push.	PMT	DRB	

RANK STRAND ELECTRIC
PO Box 70 Great West Road Brentford Middlesex TW8 9HR
Telephone 01-568 9222 Telex 24408
A DIVISION OF
RANK AUDIO VISUAL LIMITED

DIMENSIONS IN INCHES/MILLIMETRES
THIRD ANGLE PROJECTION

TOLERANCES	
IMPERIAL	METRIC
FRACTION ± 1/64"	1 DEC PLACE ± 0·4 mm
DECIMAL ± ·005"	2 DEC PLACE ± 0·1 mm
ANGULAR ± 0·25°	
UNLESS OTHERWISE STATED	
USED ON :-	

		DATE
SCALE	K Jones	12 SEPT 75
DRAWN		
CHECKED	D R B	18/6/75
APPROVED	D R B	11/6/75
MATERIAL :-		
FINISH :-		

TITLE :-
MMS CHANNEL CONTROL MODULE
LAST STORE CARD
CIRCUIT DIAGRAM
REF. 1334 PCB 302/3

ISSUE C D E F | DWG. Nº 6A12737

DWG. Nº A B C D E | ISSUE 6A12600

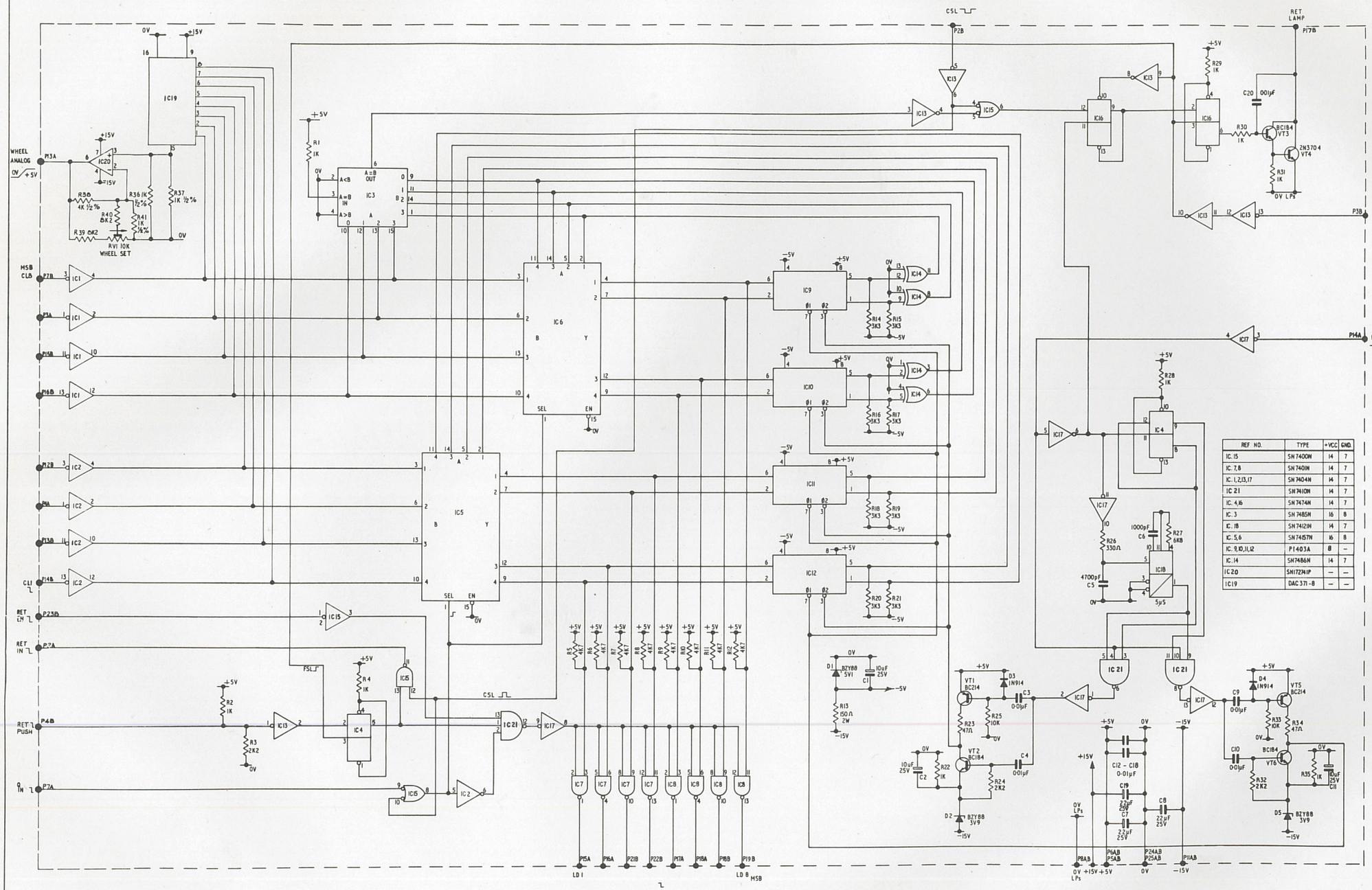

REF. NO.	TYPE	+VCC	GND
IC. 15	SN7400N	14	7
IC. 7,8	SN7401N	14	7
IC. 1,2,13,17	SN7404N	14	7
IC 21	SN7410N	14	7
IC. 4,16	SN7474N	14	7
IC. 3	SN7485N	16	8
IC. 18	SN74121N	14	7
IC. 5,6	SN74157N	16	8
IC. 9,10,11,12	P1403A	8	–
IC. 14	SN7486N	14	7
IC 20	SN1727AIP	–	–
IC19	DAC 371-8	–	–

P.C. BOARD 5A12602
SCHEDULE 5S12601

FIG. E, F, G 7

REV 1. C.N.º 6A12682 — 12 pin 156 to 10 pin 156 to 0V
REV 2. C.N.º 6A12870 — SN7410N IC21 MMS 1329 — NEW 156 E 6.11.74

RANK STRAND ELECTRIC
A DIVISION OF
RANK AUDIO VISUAL LIMITED

TOLERANCES	
IMPERIAL	METRIC
FRACTION ± 1/64"	1 DEC PLACE ± 0·4 mm
DECIMAL ± ·005	2 DEC PLACE ± 0·1 mm
ANGULAR ± 0·25°	
UNLESS OTHERWISE STATED	
USED ON:-	

DIMENSIONS IN INCHES/MILLIMETRES
THIRD ANGLE PROJECTION

		DATE
SCALE		
DRAWN	TTC	9 8 75
CHECKED	DJL	11/4/90
APPROVED	PHS	15/4/74
MATERIAL:-		
FINISH:-		

TITLE:-
MMS CHANNEL CONTROL MODULE
RETURN STORE
P.C.B 299/3 REF 1329
ISSUE A B C D E | DWG. Nº 6A12600

DWG. Nº 6A12559 | ISSUE A & B.

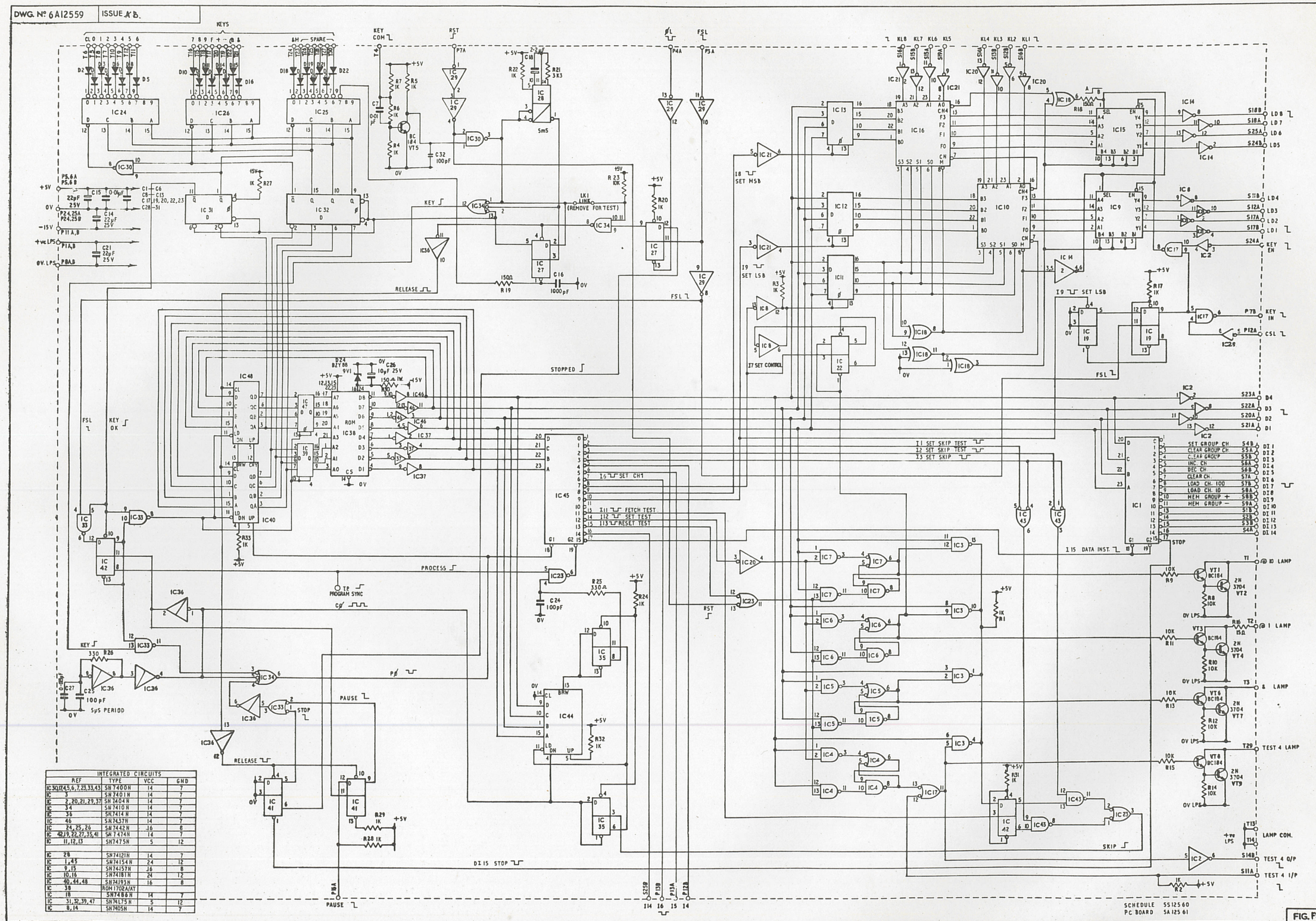

INTEGRATED CIRCUITS			
REF	TYPE	VCC	GND
IC 30,17,45,6,7,23,33,43	SN7400N	14	7
IC 3	SN7401N	14	7
IC 2,20,21,29,37	SN7404N	14	7
IC 34	SN7410N	14	7
IC 36	SN7414N	14	7
IC 46	SN7437N	14	7
IC 24,25,26	SN7442N	16	8
IC 42,19,22,27,35,41	SN7474N	14	7
IC 11,12,13	SN7475N	5	12
IC 28	SN74121N	14	7
IC 1,45	SN74154N	24	12
IC 9,15	SN74157N	16	8
IC 10,16	SN74181N	24	12
IC 40,44,48	SN74193N	16	8
IC 38	ROM 1702A/AT		
IC 18	SN7486N	14	7
IC 31,32,39,47	SN74175N	5	12
IC 8,14	SN7405N	14	7

SCHEDULE 55125 60
P.C. BOARD 5A 125 61

FIG. F8

RANK STRAND ELECTRIC
PO Box 70 Great West Road Brentford Middlesex TW8 9HR
Telephone 01-568 9222 Telex 24408
A DIVISION OF
RANK AUDIO VISUAL LIMITED

DIMENSIONS IN INCHES/MILLIMETRES
THIRD ANGLE PROJECTION

TOLERANCES		SCALE		DATE
IMPERIAL	METRIC	DRAWN	G H	24.6.74
FRACTION ± 1/64"	1 DEC PLACE ± 0.4 mm	CHECKED		19-7-74
DECIMAL ± .005"	2 DEC PLACE ± 0.1 mm	APPROVED		19-7-74
ANGULAR ± 0·25°		MATERIAL:-		
UNLESS OTHERWISE STATED		FINISH:-		
USED ON:-				

TITLE:- MMS ⓜ CHANNEL CONTROL MODULE AT PROGRAM CARD.

PCB 358/2. REF 1368

ISSUE A & B. DWG. Nº 6A12559

DWG. Nº 6A14188 | ISSUE B

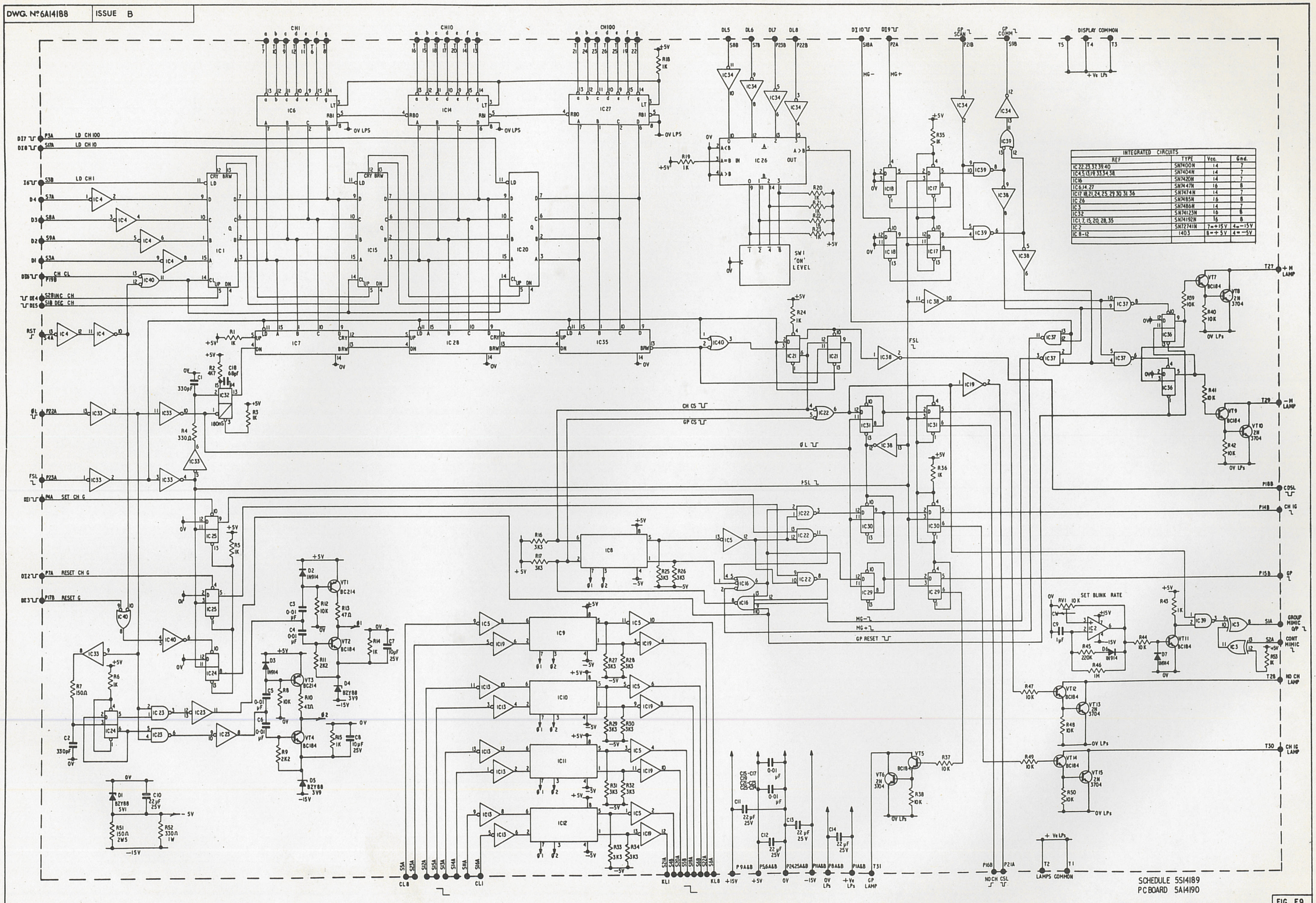

INTEGRATED CIRCUITS			
REF	TYPE	Vcc.	Gnd.
IC 22 25 37 39 40	SN7400N	14	7
IC 4 5 13 19 33 34 38	SN7404N	14	7
IC 16	SN7420N	14	7
IC 6 14 27	SN7447N	16	8
IC 17 18 21 24 25 29 30 31 36	SN7474N	14	7
IC 26	SN7485N	16	8
IC 3	SN7486N	14	7
IC 32	SN74123N	16	8
IC 1 7 15 20 28 35	SN74192N	16	8
IC 2	SN72741N	7=+15V	4=−15V
IC 8-12	1403	8=+5V	4=−5V

SCHEDULE 5S14189
PCBOARD 5A14190

FIG F9

REV.1 C.N.º

RANK STRAND ELECTRIC
PO Box 70 Great West Road Brentford Middlesex TW8 9HR
Telephone 01-568 9222 Telex 24408
A DIVISION OF
RANK AUDIO VISUAL LIMITED

DIMENSIONS IN INCHES/MILLIMETRES
THIRD ANGLE PROJECTION

TOLERANCES		SCALE		DATE
IMPERIAL	METRIC	DRAWN	F.T.C.	24-6-74
FRACTION ± 1/64"	1 DEC PLACE ± 0·4 mm	CHECKED		15-1-75
DECIMAL ± .005"	2 DEC PLACE ± 0·1 mm	APPROVED		15-1-75
ANGULAR ± 0·25°		MATERIAL:-		
UNLESS OTHERWISE STATED		FINISH:-		
USED ON:-				

TITLE:-
MMS ⓐ CHANNEL CONTROL MODULE
CHANNEL REGISTER CARD
REF 1369 PCB 359/2
ISSUE B DWG. Nº 6A14188

DWG. Nº 6BI2337	ISSUE A B

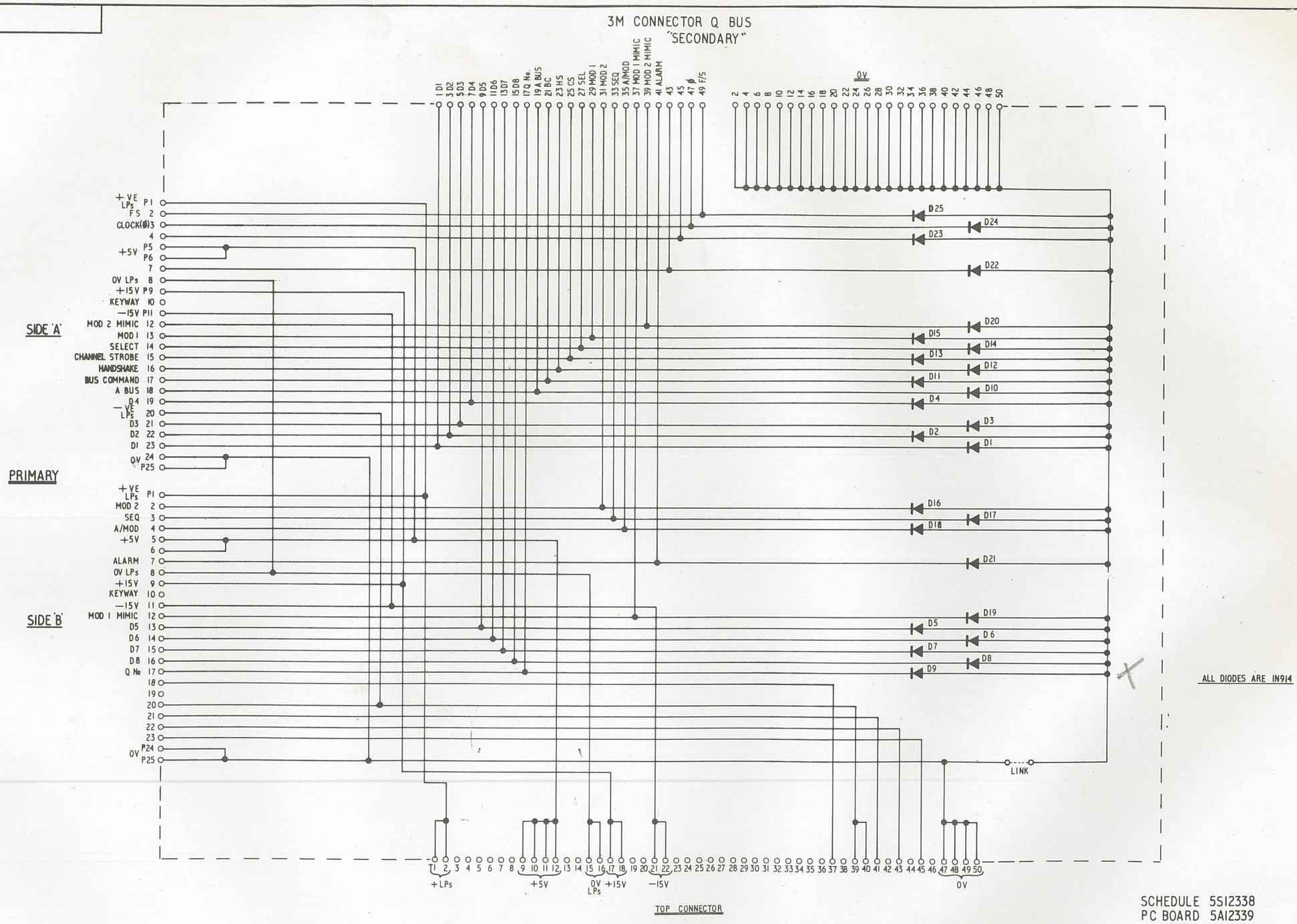

SCHEDULE 5SI2338
PC BOARD 5AI2339

FIG. D,E,F,G,H
J,M,R,S,2.

REV.| C.Nº

RANK STRAND ELECTRIC
PO Box 70 Great West Road Brentford Middlesex TW8 9HR
Telephone 01-568 9222 Telex 24408
A DIVISION OF
RANK AUDIO VISUAL LIMITED

DIMENSIONS IN INCHES/MILLIMETRES
THIRD ANGLE PROJECTION

TOLERANCES		SCALE		DATE
IMPERIAL	METRIC	DRAWN	T.T.C.	26·7·73
FRACTION ± 1/64"	1 DEC PLACE ± 0·4mm	CHECKED	D.R.H.	4/8/74
DECIMAL ± ·005"	2 DEC PLACE ± 0·1mm	APPROVED	D.R.H.	4/8/74
ANGULAR ± 0·25°		MATERIAL:-		
UNLESS OTHERWISE STATED				
USED ON:-		FINISH:-		

TITLE:-
MMS MODULE BUS CONNECT CARD
CIRCUIT DIAGRAM
REF 1313 PCB 277/3

ISSUE A B | DWG. Nº 6BI2337

CWG & S.

DWG. Nº 6C12334 | ISSUE ~~A~~ ~~B~~ C

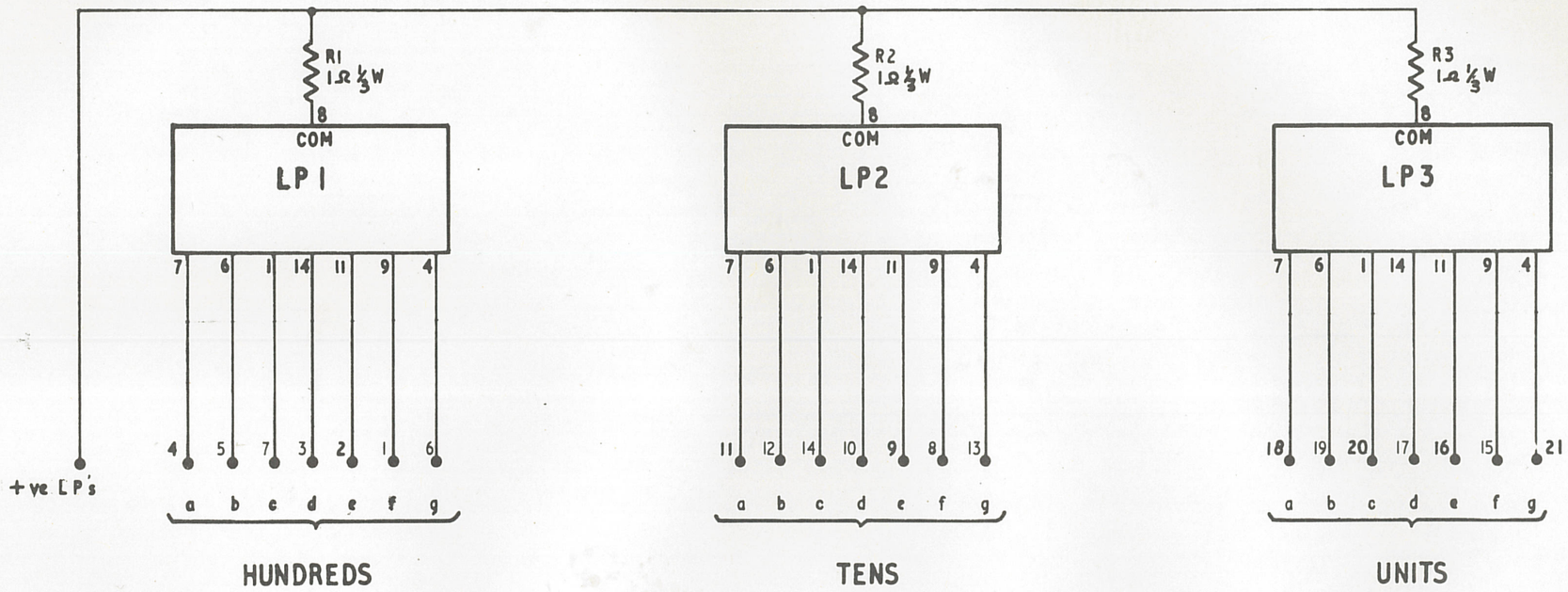

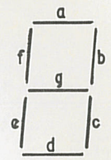

LETTERED SEGMENTS AS FOR SN 7447N.

NOTE:
ALL LP's ARE KGM MS 141

PC BOARD DRG. No. 5C12336
SCHEDULE 5S12335

FIG. D, E, F, G, H J, M, R, S, 3

REV. 1. C. Nº
C. Nº E1935
1 OHM RESISTOR
WAS 1 OHM. ½W.
19.12.74

RANK STRAND ELECTRIC
PO Box 70 Great West Road Brentford Middlesex TW8 9HR
Telephone 01-568 9222 Telex 24408
A DIVISION OF
RANK AUDIO VISUAL LIMITED

DIMENSIONS IN INCHES/MILLIMETRES
THIRD ANGLE PROJECTION

TOLERANCES	
IMPERIAL	METRIC
FRACTION ± 1/64"	1 DEC PLACE ± 0·4 mm
DECIMAL ± ·005"	2 DEC PLACE ± 0·1 mm
ANGULAR ± 0·25°	
UNLESS OTHERWISE STATED	

USED ON :-

SCALE	—	DATE
DRAWN	G. HAYWARD	13·4·73
CHECKED	[signature]	14.5.74
APPROVED	[signature]	14/5/74

MATERIAL :-

FINISH :-

TITLE :-
MMS DISPLAY CARD
CIRCUIT DIAGRAM.

PCB 272 REF 1310

ISSUE ~~A~~ ~~B~~ C | DWG. Nº 6C12334

CWG & S.

DWG. Nº 7A13881 | ISSUE K&L&D

STAGE | PRESET

② BUS COMM REF. 1341

④ FADE & OUTPUT REF. 1343

⑩ STAGE STORE REF 1346

⑦ MULTIPLIER REF 1344

③ CONTACT & Q. No. REF. 1342

⑧ RATE & METER REF. 1348

⑨ PRESET & Δ REF. 1347

⑥ NOT RECORDED REF. 1345

① BUS CONNECT REF. 138

⑤ LIGHT METER REF. 1350

STAGE Q. DISPLAY

PRESET Q. DISPLAY

STAGE FIGURES

PRESET FIGURES

(LINK IF HALT PUSH NOT FITTED)

UP SPEED DN FADERS

METER LAMPS

UP METERS
DN METERS
COMM
+LPs

ONLY IF FITTED INSTEAD OF LIGHT METER.

POWER PLUG

UP LED COLUMN

DOWN LED COLUMN

LED CARD REF 1355

Q BUS

REAR VIEW (TOP)

Q BUS CONNECTOR.

POWER PLUG

SECONDARY

PRIMARY

BNC SOCKETS

BNC.2 MOVE MIMIC

BNC.3 MIMIC PRESET

BNC.1 MIMIC STAGE

SEQ ON LAMPS (BBC)

REC LPs

FILE LAMPS (BBC)

NRST LPs

NOT REC ST.

NRPR LPs

NOT REC PR

REC LOCK BUS

SEQ L

FIG J1

BRN.1 CHANGES
Pin No's Changed
on conn.

Rev 2 CHANGES
4.12.72.
8TH In Panel
ATH was 4TH
17/10/73 Extension
12.11.73 Colour

RANK STRAND ELECTRIC
A DIVISION OF
RANK AUDIO VISUAL LIMITED

DIMENSIONS IN INCHES/MILLIMETRES
THIRD ANGLE PROJECTION

TOLERANCES	IMPERIAL	METRIC
	FRACTION ± 1/64"	1 DEC PLACE ± 0.4mm
	DECIMAL ± .005"	2 DEC PLACE ± 0.1mm
	ANGULAR ± 0.25°	
	UNLESS OTHERWISE STATED	

USED ON:-

SCALE		DATE
DRAWN	C. COOPER	9.5.74
CHECKED		11.6.74
APPROVED		13.6.74
MATERIAL:-		
FINISH:-		

TITLE:-
MMS RATE PLAYBACK MODULE
WIRING DIAGRAM

ISSUE K&L&D | DWG. Nº 7A13881

DWG. Nº 6A13401 | ISSUE ~~A~~B~~C~~D

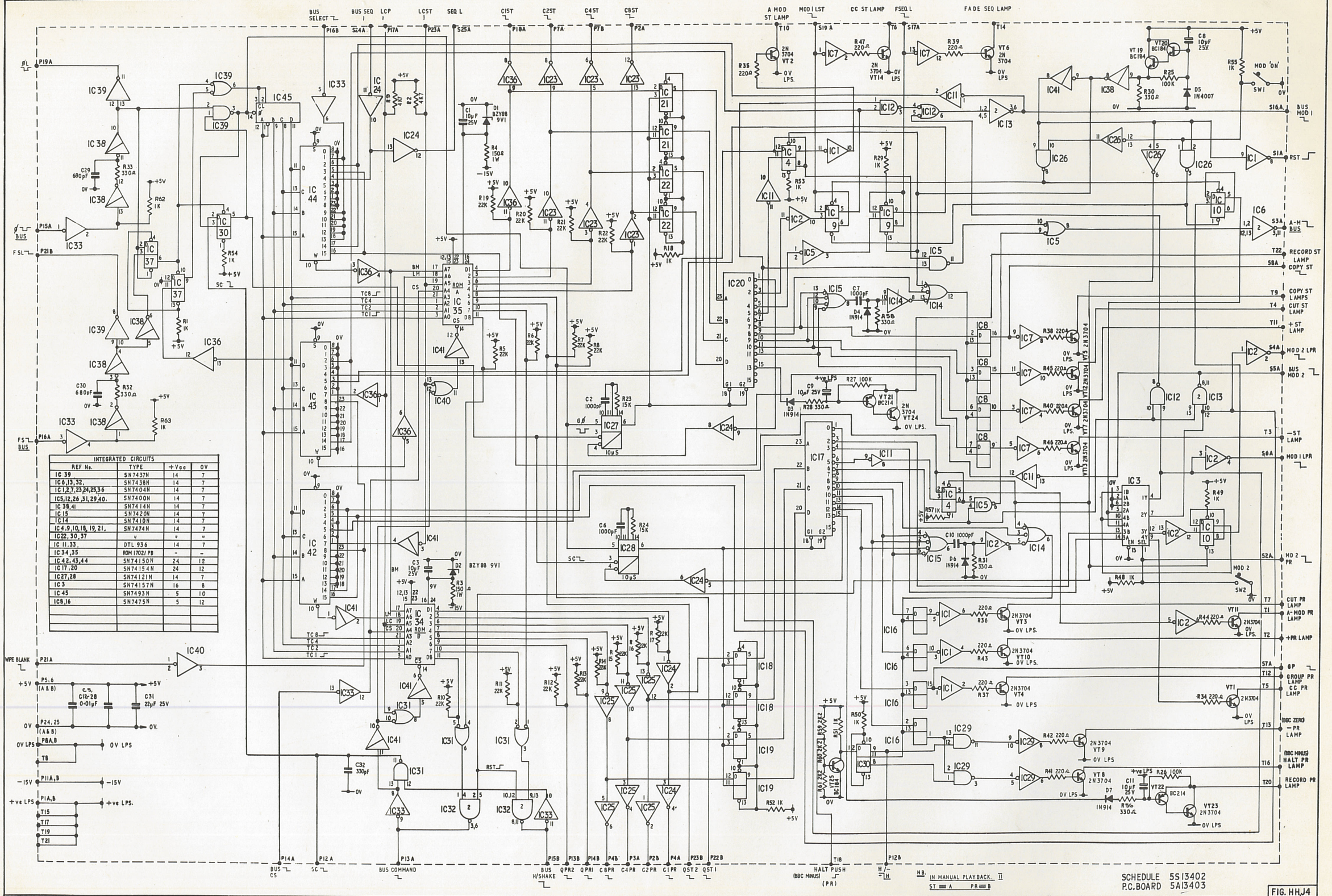

INTEGRATED CIRCUITS			
REF No.	TYPE	+Vcc	0V
IC 39	SN7437N	14	7
IC6,13,32,	SN7438N	14	7
IC1,2,7,23,24,25,36	SN7404N	14	7
IC5,12,26,31,29,40.	SN7400N	14	7
IC 38,41	SN7414N	14	7
IC 15	SN7420N	14	7
IC14	SN7410N	14	7
IC4,9,10,18,19,21,	SN7474N	14	7
IC22,30,37	"	"	"
IC 11,33,	DTL 936	14	7
IC 34,35	ROM 1702/PB	-	-
IC 42,43,44	SN74150N	24	12
IC17,20	SN74154N	24	12
IC27,28	SN74121N	14	7
IC3	SN74157N	16	8
IC 45	SN7493N	5	10
IC8,16	SN7475N	5	12

NB. IN MANUAL PLAYBACK. II
ST ═ A PR ═ B

SCHEDULE 5S13402
P.C.BOARD 5A13403

FIG. HH,J4

REV.1. C.Nº 1746
PCB WAS 315/2
NEW 166.D
13.9.74 [illegible]

RANK STRAND ELECTRIC
PO Box 70 Great West Road Brentford Middlesex TW8 9HR
Telephone 01-568 9222 Telex 24408
A DIVISION OF
RANK AUDIO VISUAL LIMITED

DIMENSIONS IN INCHES/MILLIMETRES
THIRD ANGLE PROJECTION

TOLERANCES				
IMPERIAL	METRIC	SCALE		DATE
FRACTION ± 1/64"	1 DEC PLACE ± 0·4 mm	DRAWN	G A H	5.1.74
DECIMAL ± ·005"	2 DEC PLACE ± 0·1 mm	CHECKED	D.E.G.	11/6/74
ANGULAR ± 0·25°		APPROVED	D.R.G.	11/6/74
UNLESS OTHERWISE STATED		MATERIAL:-		
USED ON:-		FINISH:-		

TITLE:-
MMS PLAYBACK MODULE BUS
COMMUNICATION CIRCUIT DIAGRAM.
PCB 315/3 REF 1341

ISSUE ~~A~~B~~C~~D | DWG. Nº 6A13401

DWG. Nº6A13457 | ISSUE ~~A~~ B C

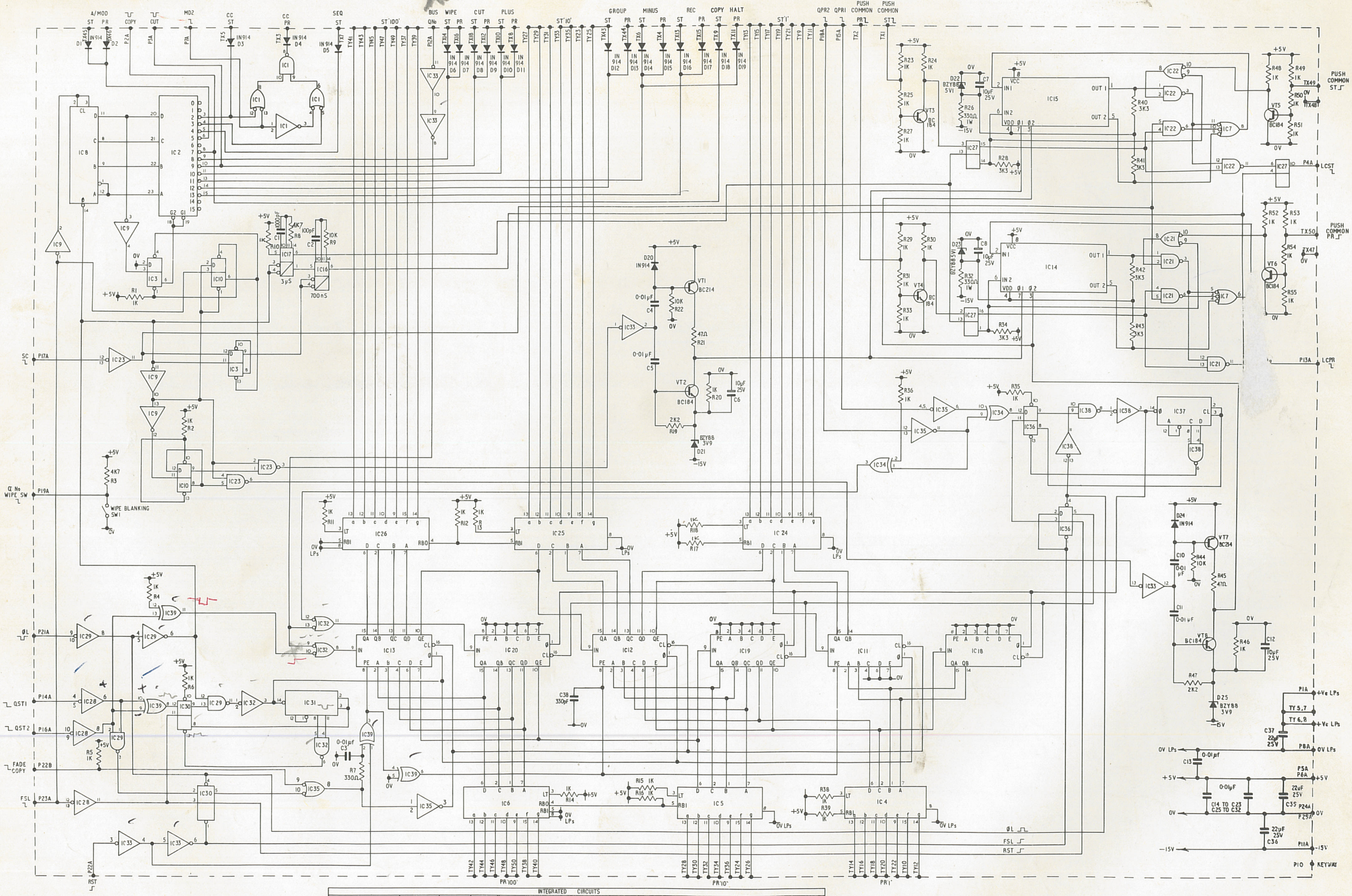

N.B. IN MANUAL PLAYBACK II
ST≡A, PR≡B

INTEGRATED CIRCUITS											
REF	TYPE	VCC	GND	REF	TYPE	VCC	GND	REF	TYPE	VCC	GND
IC1,21,22,23,28,29,32,35,38,	SN7400N	14	7	IC3,10,30,36,	SN7474	14	7	IC16,17	SN74121	14	7
IC9,33,	SN7404N	14	7	IC34,39	SN7486	14	7	IC2	SN74154	24	12
IC7	SN7410N	14	7	IC8,31,37	SN7493	5	10	IC14,15	P1403A	8	
IC4,5,6,24,25,26	SN7447	16	8 0VLPs	IC11,12,13,18,19,20	SN7496N	5	12	IC27	SN7475N	5	12

SCHEDULE 5S13458
P.C. BOARD 5A13459

FIG. HH, J5

REV. 1. C.Nº

RANK STRAND ELECTRIC
PO Box 70 Great West Road Brentford Middlesex TW8 9HR
Telephone 01-568 9222 Telex 24408
A DIVISION OF
RANK AUDIO VISUAL LIMITED

DIMENSIONS IN INCHES/MILLIMETRES
THIRD ANGLE PROJECTION

TOLERANCES		
IMPERIAL	METRIC	
FRACTION ± 1/64"	1 DEC PLACE ± 0.4 mm	
DECIMAL ± .005"	2 DEC PLACE ± 0.1 mm	
ANGULAR ± 0.25°		
UNLESS OTHERWISE STATED		
USED ON:-		

SCALE		DATE
DRAWN	T.T.C.	4-1-74
CHECKED	D.C.B.	11/6/74
APPROVED	D.C.B.	11/6/74
MATERIAL:-		
FINISH:-		

TITLE:-
MMS PLAYBACK MODULE CUE No. S
& CONTACT SCAN ASSY
CIRCUIT DIAGRAM
PCB 316/2 REF1342

ISSUE ~~A~~ B C | DWG. Nº 6A13457

DWG. Nº 6A13464 ISSUE BC

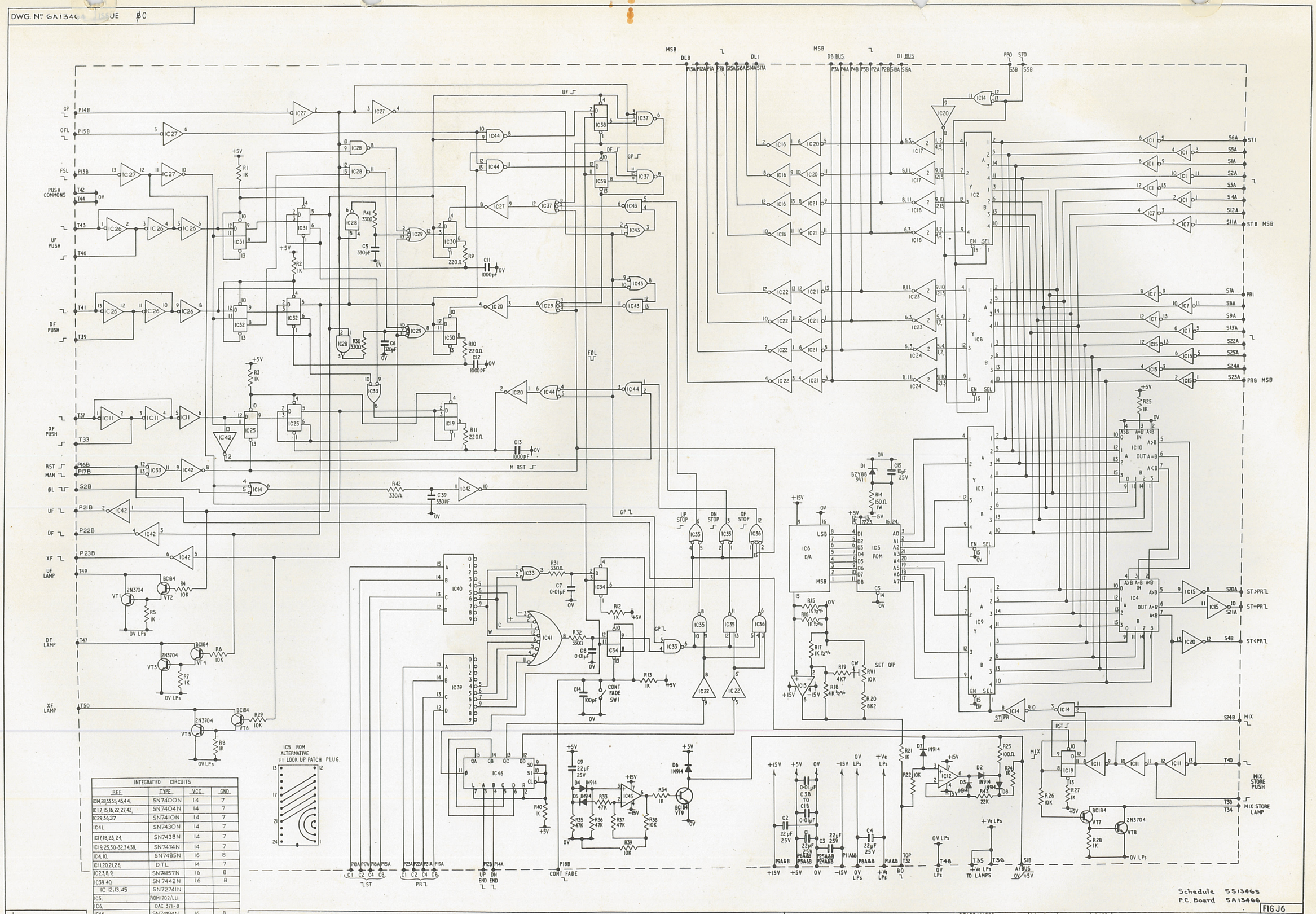

INTEGRATED CIRCUITS			
REF.	TYPE	VCC	GND
IC14,28,33,35,43,44,	SN7400N	14	7
IC1,7,15,16,22,27,42,	SN7404N	14	7
IC29,36,37	SN7410N	14	7
IC41,	SN7430N	14	7
IC17,18,23,24,	SN7438N	14	7
IC19,25,30-32,34,38,	SN7474N	14	7
IC4,10,	SN7485N	16	8
IC11,20,21,26,	DTL	14	7
IC2,3,8,9,	SN74157N	16	8
IC39,40,	SN7442N	16	8
IC12,13,45	SN72741N		
IC5,	ROM1702/LU		
IC6,	DAC 371-8		
IC46	SN74194N	16	8

Schedule 5S13465
P.C. Board 5A13466

FIG J6

RANK STRAND ELECTRIC
PO Box 70 Great West Road Brentford Middlesex TW8 9HR
Telephone 01-568 9222 Telex 24408
A DIVISION OF
RANK AUDIO VISUAL LIMITED

DIMENSIONS IN INCHES/MILLIMETRES
THIRD ANGLE PROJECTION

TOLERANCES				
IMPERIAL	METRIC	SCALE		DATE
FRACTION ± 1/64"	1 DEC PLACE ± 0·4 mm	DRAWN	T.T.C.	15-1-74
DECIMAL ± ·005"	2 DEC PLACE ± 0·1 mm	CHECKED	D.R.B.	11/6/74
ANGULAR ± 0·25°		APPROVED	D.R.B.	11/6/74
UNLESS OTHERWISE STATED		MATERIAL :-		
USED ON :-		FINISH :-		

TITLE :-
MMS RATE PLAYBACK
FADE & O/P CARD
CIRCUIT DIAGRAM
PCB 318/82 REF. 1343

ISSUE BC DWG. Nº 6A13464

REV. 1. C.Nº

DWG. Nº 6A13501 | ISSUE A ~~B~~ ~~C~~ ~~D~~ E

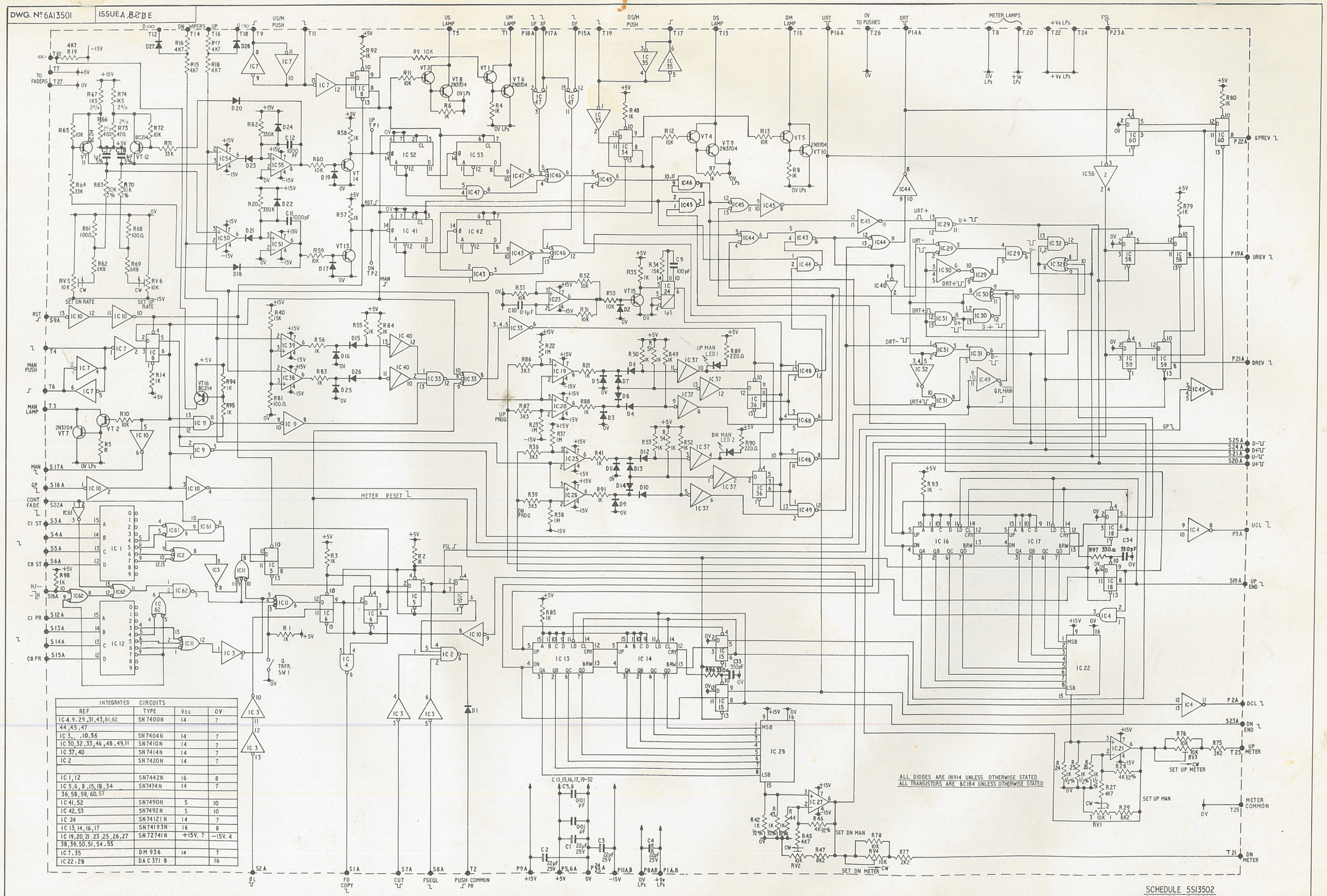

INTEGRATED CIRCUITS			
REF	TYPE	Vcc	0V
IC 4, 9, 29, 31, 43, 61, 62, 44, 45, 47	SN7400N	14	7
IC 3, .. 10, 56	SN7404N	14	7
IC 30, 32, 33, 46, 48, 49, 11	SN7410N	14	7
IC 37, 40	SN7414N	14	7
IC 2	SN7420N	14	7
IC 1, 12	SN7442N	16	8
IC 5, 6, 8, 15, 18, 34, 36, 58, 59, 60, 57	SN7474N	14	7
IC 41, 52	SN7490N	5	10
IC 42, 53	SN7492N	5	10
IC 24	SN74121N	14	7
IC 13, 14, 16, 17	SN74193N	16	8
IC 19, 20, 21, 23, 25, 26, 27, 38, 39, 50, 51, 54, 55	SN72741N	+15V. 7	−15V. 4
IC 7, 35	DM 936	14	7
IC 22, 28	DAC 371 B		16

SCHEDULE 5S13502
P.C.BOARD 5A13503

FIG. J7

REV. 1 C.Nº E1747 Circuit Modified To Prevent Over-fade In Manual Group. PCB Was 331/2. 22-7-74

REV 2 C.Nº 2016 C5 & 6 DELETED 11/9/75

REV. 3 C.Nº E2062 CUT TRACK TO IC5/11 AND IC5/13. LINK IC5/13 TO IC5/12 LINK IC5/11 TO IC5/3 PCB WAS 331/4 27/2/75 C.M.C.

RANK STRAND ELECTRIC
PO Box 70 Great West Road Brentford Middlesex TW8 9HR
Telephone 01-568 9222 Telex 24408
A DIVISION OF
RANK AUDIO VISUAL LIMITED

DIMENSIONS IN INCHES/MILLIMETRES
THIRD ANGLE PROJECTION

TOLERANCES	
IMPERIAL	METRIC
FRACTION ± 1/64"	1 DEC PLACE ± 0·4 mm
DECIMAL ± ·005"	2 DEC PLACE ± 0·1 mm
ANGULAR ± 0·25°	
UNLESS OTHERWISE STATED	
USED ON :-	

SCALE		DATE
DRAWN	T.T.C.	14-2-74
CHECKED	D.R.C.	11/6/74
APPROVED	D.R.C.	11/6/74
MATERIAL :-		
FINISH :-		

TITLE :-
MMS RATE PLAYBACK
RATE & METER DRIVE
PCB 331/5 REF 1348

ISSUE A ~~B~~ ~~C~~ ~~D~~ E | DWG. Nº 6A13501

Extend Card

Faders to Bottom - in Manual

P14A - P16A - should get pulse's 1μm @ 4v.

check pulses at IC 48-49 outputs

IC 48/12 pulse ∴ No pulse on 48/6

or Visa-Verser.

IC 19-20/6 should be 0v.
Move Faders up and down fast to get -15v, +15v.

Comparitors output
IC 19

IC 19 - 15 V
37 pin p11 0.

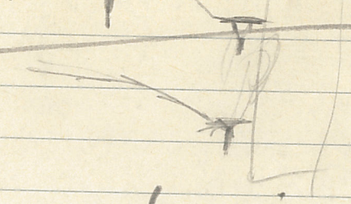

IC 21 pin 1 0 To 5 v.

IC 19 pin 3.
pin 2 faders
pin 6 - 15 start of fade

at -15

IC - 19 -15 v (start of fade)

→ IC 37-11 0v

IC - 20 inverted To IC 19

~~A~~ fader
In Auto IC 21 - 6
0 - 5 Volts

DWG. Nº 6AI3507 | ISSUE C

UP L.E.D. COLUMN

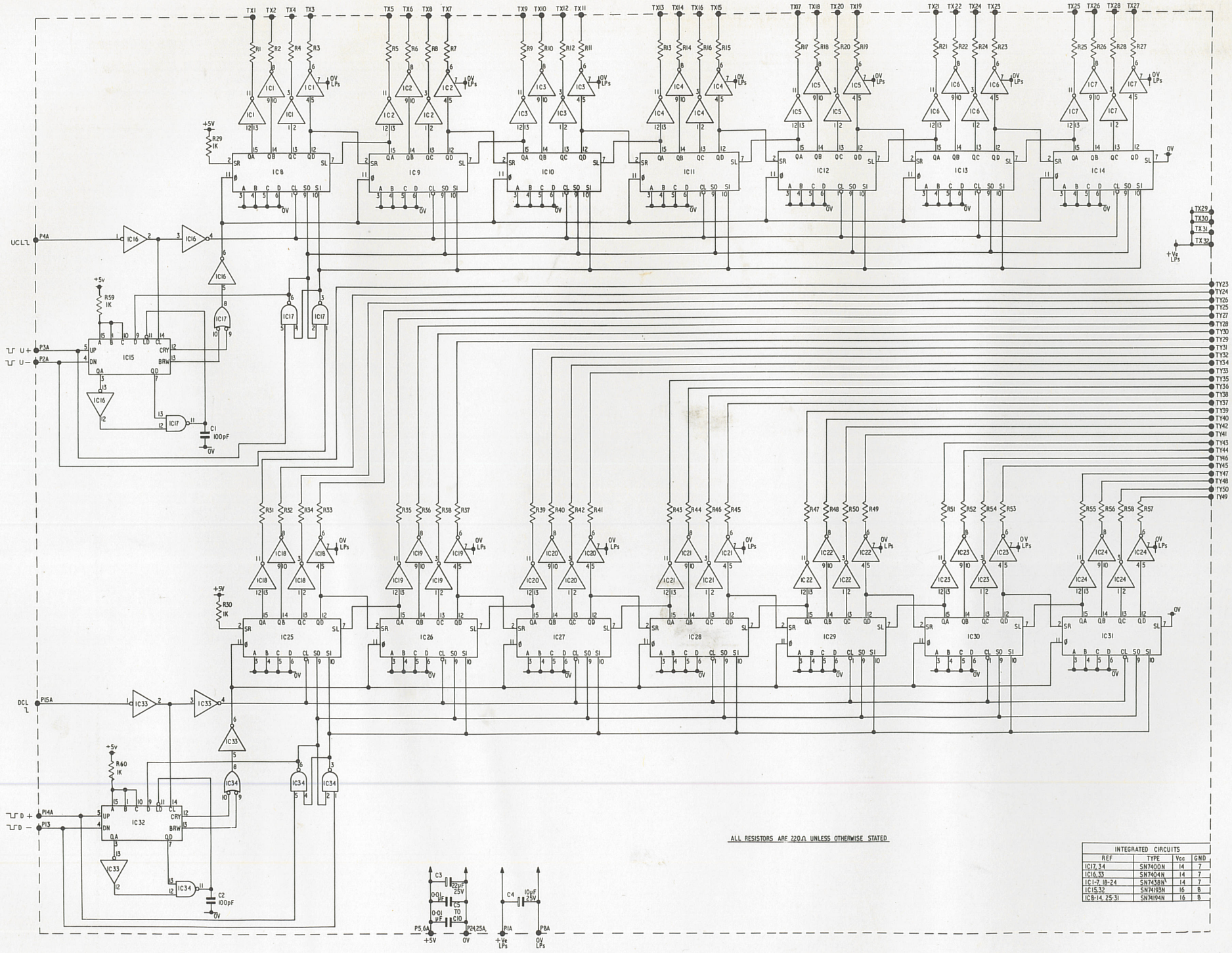

ALL RESISTORS ARE 220Ω UNLESS OTHERWISE STATED

INTEGRATED CIRCUITS			
REF	TYPE	Vcc	GND
IC17, 34	SN7400N	14	7
IC16, 33	SN7404N	14	7
IC1-7, 18-24	SN7438N¹	14	7
IC15, 32	SN74193N	16	8
IC8-14, 25-31	SN74194N	16	8

SCHEDULE 5SI3508
P.C.BOARD 5AI3509

FIG. J8

REV.I C.N°EC1725 PCB WAS 328/1 IS 328/2

RANK STRAND ELECTRIC
P.O Box 70 Great West Road Brentford Middlesex TW8 9HR
Telephone 01-568 9222 Telex 24408
A DIVISION OF
RANK AUDIO VISUAL LIMITED

DIMENSIONS IN INCHES/MILLIMETRES
THIRD ANGLE PROJECTION

TOLERANCES		SCALE		DATE
IMPERIAL	METRIC	DRAWN	T.T.C	16-2-74
FRACTION ± 1/64"	1 DEC PLACE ± 0·4 mm	CHECKED	D.E.A	11/2/74
DECIMAL ± ·005"	2 DEC PLACE ± 0·1 mm	APPROVED	D.E.A	11/2/74
ANGULAR ± 0·25°		MATERIAL :-		
UNLESS OTHERWISE STATED				
USED ON :-		FINISH :-		

TITLE :-
MMS RATE PLAYBACK
LIGHT METER CARD
P.C.B 328/2 REF 1350
ISSUE C | DWG. Nº 6AI3507

DWG. Nº 6B13510 | ISSUE A

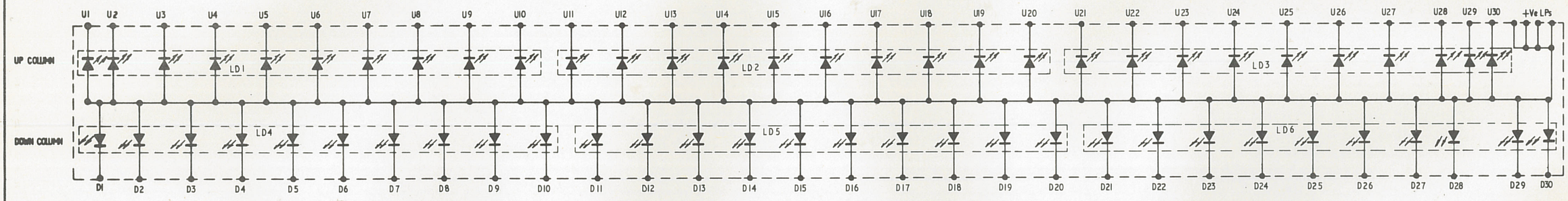

Schedule 5S13636
P.C. Board 5C13637

FIG J9

REV. 1. C.Nº

RANK STRAND ELECTRIC
PO Box 70 Great West Road Brentford Middlesex TW8 9HR
Telephone 01-568 9222 Telex 24408
A DIVISION OF
RANK AUDIO VISUAL LIMITED

DIMENSIONS IN INCHES/MILLIMETRES
THIRD ANGLE PROJECTION

TOLERANCES	
IMPERIAL	METRIC
FRACTION ± 1/64"	1 DEC PLACE ± 0·4 mm
DECIMAL ± ·005"	2 DEC PLACE ± 0·1 mm
ANGULAR ± 0·25°	
UNLESS OTHERWISE STATED	
USED ON :-	

SCALE		DATE
DRAWN	T.T.C.	15-2-74
CHECKED	DRB	14/6/74
APPROVED	DRB	14/6/74
MATERIAL :-		
FINISH :-		

TITLE :-
MMS RATE PLAYBACK
LED CARD
CIRCUIT DIAGRAM
P.C.B. 327/1 REF. 1355

ISSUE A | DWG. Nº 6B13510

DWG. Nº 6AI3498 | ISSUE A B

INTEGRATED CIRCUITS				
REF.	TYPE	+Vcc	GRD.	-Vcc
IC 17,35,43	SN7400N	14	7	
IC8,11,12,18,22,29,36,44	SN7404N	14	7	
IC 34	SN7410N	14	7	
IC 23	SN7414N	14	7	
IC 33	SN7437N	14	7	
IC 24	SN7438N	14	7	
IC 30	SN7442N	16	8	
IC 42	SN7474N	14	7	
IC 5,6,7	SN7485N	16	8	
IC 19,20,21,31,32	SN7486N	14	7	
IC 41	SN74121N	14	7	
IC 9,10,15,16,27,28	SN74157N	16	8	
IC 13,14,25,26	SN74181N	24	12	
IC 1,2,3,4,37,38, 39,40.	P14093A	8	—	4

SCHEDULE 5SI3499
PCBOARD 5AI3500

FIG. J10.

REV. | C.Nº

RANK STRAND ELECTRIC
PO Box 70 Great West Road Brentford Middlesex TW8 9HR
Telephone 01-568 9222 Telex 24408
A DIVISION OF
RANK AUDIO VISUAL LIMITED

DIMENSIONS IN INCHES/MILLIMETRES
THIRD ANGLE PROJECTION

TOLERANCES	
IMPERIAL	METRIC
FRACTION ± 1/64"	1 DEC PLACE ± 0·4 mm
DECIMAL ± ·005"	2 DEC PLACE ± 0·1 mm
ANGULAR ± 0·25°	
UNLESS OTHERWISE STATED	
USED ON :-	

		DATE
SCALE		
DRAWN	T.T.C.	1-2-74
CHECKED	D.R.G.	11/6/74
APPROVED	D.R.G.	11/6/74
MATERIAL :-		
FINISH :-		

TITLE :-
MMS RATE PLAYBACK
STAGE STORE
320/2 REF 1346
ISSUE A B DWG. Nº 6AI3498

DWG. Nº 6A13495 | ISSUE B C

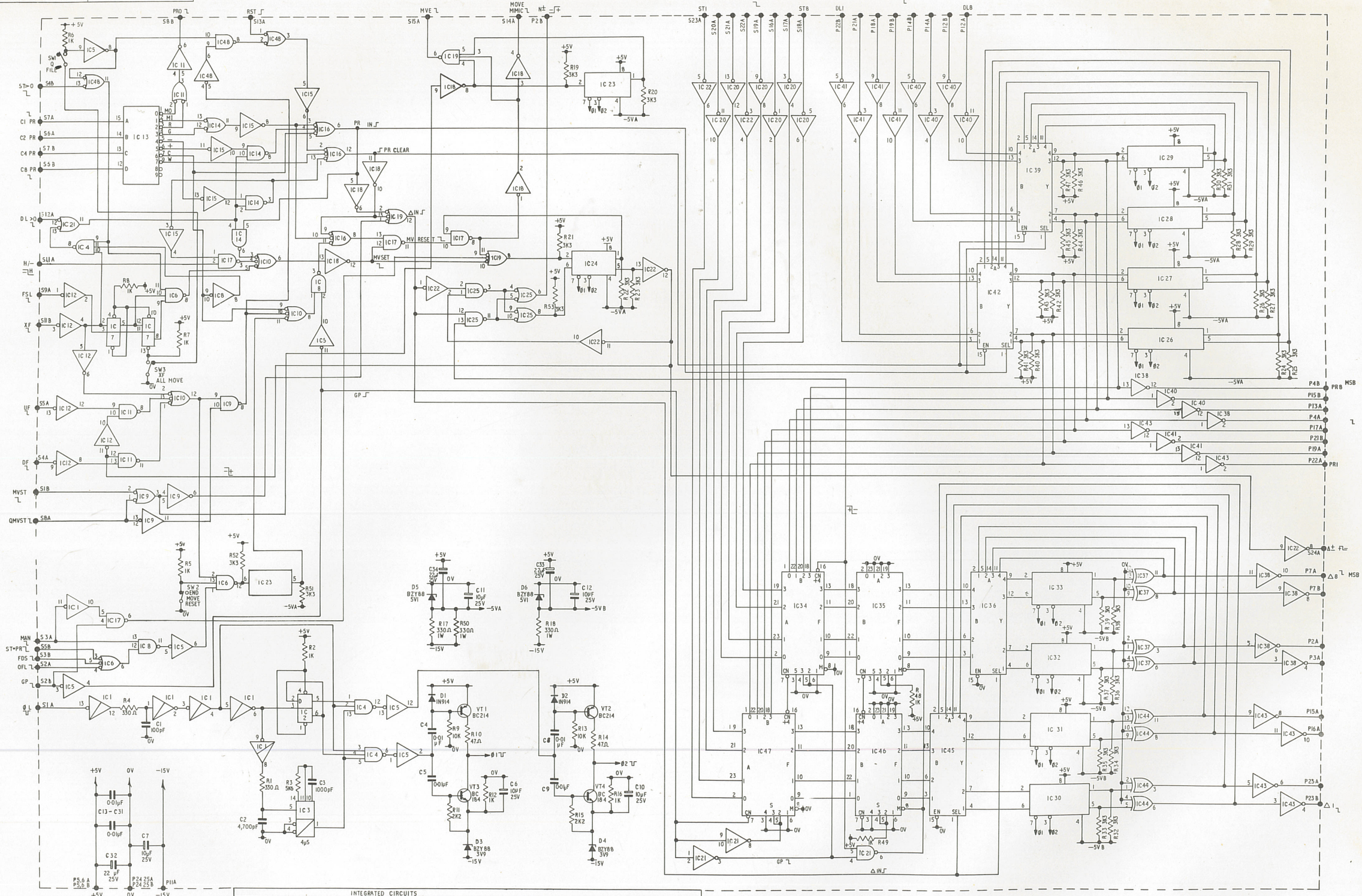

INTEGRATED CIRCUITS										
REF	TYPE	VCC	GND	REF	TYPE	VCC	GND	REF	TYPE	VCC	GND
IC1	SN7414N	14	7	IC8,9 11 14 17 21 25 48	SN7400N	14	7	IC 37,44	SN7486N	14	7
IC2,7	SN7474N	14	7	IC 13	SN7442N	16	8				
IC3	SN7412N	14	7	IC23 & 26-33 INC	PT405A	9	-				
IC4 10 16 19	SN7410N	14	7	IC 34 35 46 47	SN74181N	24	12				
IC5 12 15 18 20 22 38 40 41 43	SN7404N	14	7	IC 36 39 42 45	SN74157N	16	8				

FIG. J11

RANK STRAND ELECTRIC	TOLERANCES	SCALE	DATE
PO Box 70 Great West Road Brentford Middlesex TW8 9HR	IMPERIAL / METRIC	DRAWN TTC	4-2-74
Telephone 01-568 9222 Telex 24408	FRACTION ± 1/64" / 1 DEC PLACE ± 0·4mm	CHECKED	
A DIVISION OF	DECIMAL ± ·005" / 2 DEC PLACE ± 0·1mm	APPROVED	
RANK AUDIO VISUAL LIMITED	ANGULAR ± 0·25°	MATERIAL :-	
DIMENSIONS IN INCHES/MILLIMETRES	UNLESS OTHERWISE STATED	FINISH :-	
THIRD ANGLE PROJECTION	USED ON :-		

TITLE :- MMS RATE PLAYBACK
PRESET & Δ STORE PCB330/2 REF1347

ISSUE B C | DWG. Nº 6A13495

C.Nº REV.1

DWG. Nº 6A13460 | ISSUE BC

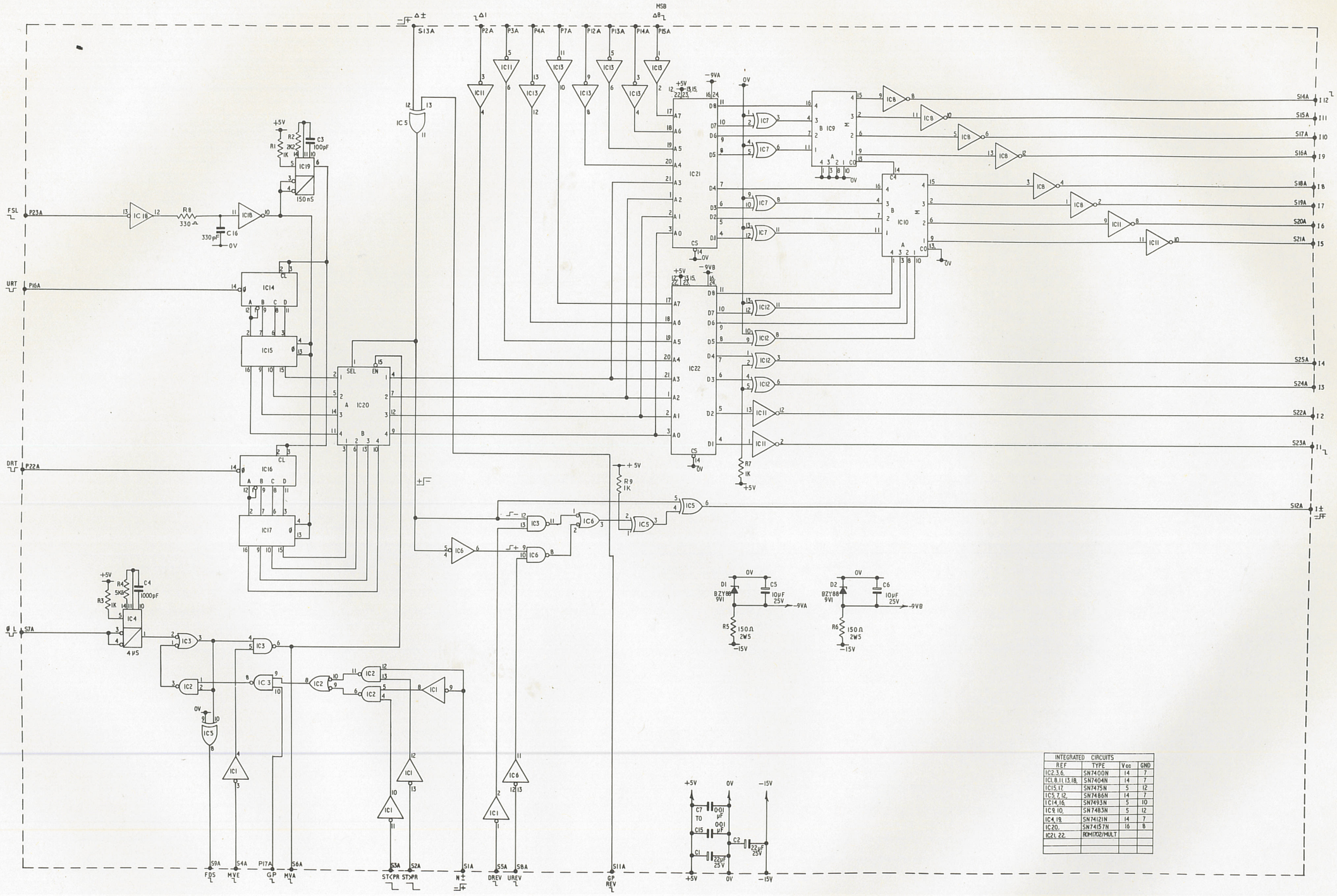

INTEGRATED CIRCUITS			
REF	TYPE	Vcc	GND
IC2,3,6,	SN7400N	14	7
IC1,8,11,13,18,	SN7404N	14	7
IC15,17,	SN7475N	5	12
IC5,7,12,	SN7486N	14	7
IC14,16,	SN7493N	5	10
IC9,10,	SN7483N	5	12
IC4,19,	SN74121N	14	7
IC20,	SN74157N	16	8
IC21,22,	ROM1702/MULT		

SCHEDULE 5S13461
P.C. BOARD 5A13462

FIG J12

REV.1 C.Nº

RANK STRAND ELECTRIC
PO Box 70 Great West Road Brentford Middlesex TW8 9HR
Telephone 01-568 9222 Telex 24408
A DIVISION OF
RANK AUDIO VISUAL LIMITED

DIMENSIONS IN INCHES/MILLIMETRES
THIRD ANGLE PROJECTION

TOLERANCES	
IMPERIAL	METRIC
FRACTION ± 1/64"	1 DEC PLACE ± 0·4 mm
DECIMAL ± ·005"	2 DEC PLACE ± 0·1 mm
ANGULAR ± 0·25°	
UNLESS OTHERWISE STATED	
USED ON :-	

SCALE		DATE
DRAWN	TTC	21-1-74
CHECKED	[illegible]	8/6/74
APPROVED	[illegible]	16/6/74
MATERIAL :-		
FINISH :-		

TITLE :-
MMS RATE PLAYBACK MULTIPLIER
PCB 317/1 REF 1344
ISSUE BC DWG. Nº 6A13460

DWG. Nº 6AI3492 | ISSUE A,B C

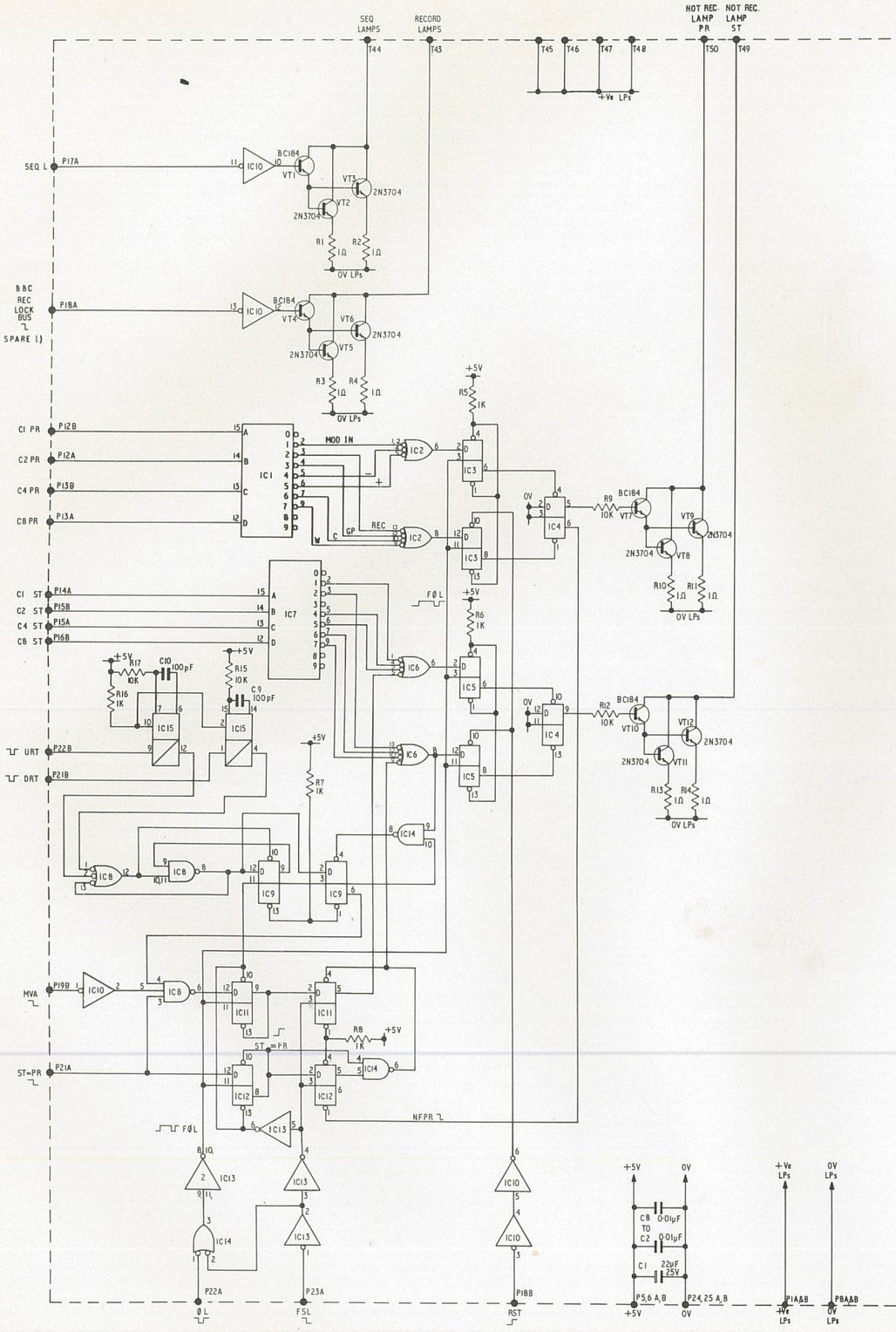

INTEGRATED CIRCUITS			
REF	TYPE	Vcc	GND
IC13,	SN7404	14	7
IC8,	SN7410N	14	7
IC2,6,	SN7420N	14	7
IC1,7,	SN7442N	16	8
IC3,4,5,9,11,12,	SN7474N	14	7
IC10,	DTL 936	14	7
IC14	SN7400N	14	7
IC15	SN74123N	16	8

SCHEDULE 5S13493
P.C.BOARD 5AI3494

FIG J13

C.Nº REV.L

RANK STRAND ELECTRIC
PO Box 70 Great West Road Brentford Middlesex TW8 9HR
Telephone 01-568 9222 Telex 24408
A DIVISION OF
RANK AUDIO VISUAL LIMITED

DIMENSIONS IN INCHES/MILLIMETRES

TOLERANCES		SCALE		DATE
IMPERIAL	METRIC	DRAWN	T.T.C.	6-2-74
FRACTION ± 1/64"	1 DEC PLACE ± 0·4mm	CHECKED	D.R.G.	11/6/74
DECIMAL ± ·005"	2 DEC PLACE ± 0·1mm	APPROVED	D.R.G.	11/6/74
ANGULAR ± 0·25°		MATERIAL:-		
UNLESS OTHERWISE STATED				
USED ON:-		FINISH:-		

TITLE:-
MMS RATE PLAYBACK
NOT RECORDED CARD.
P.C.B. 319/2 REF. 1345

ISSUE A,B,C DWG. Nº 6AI3492

DWG. Nº 7B13513 | ISSUE A

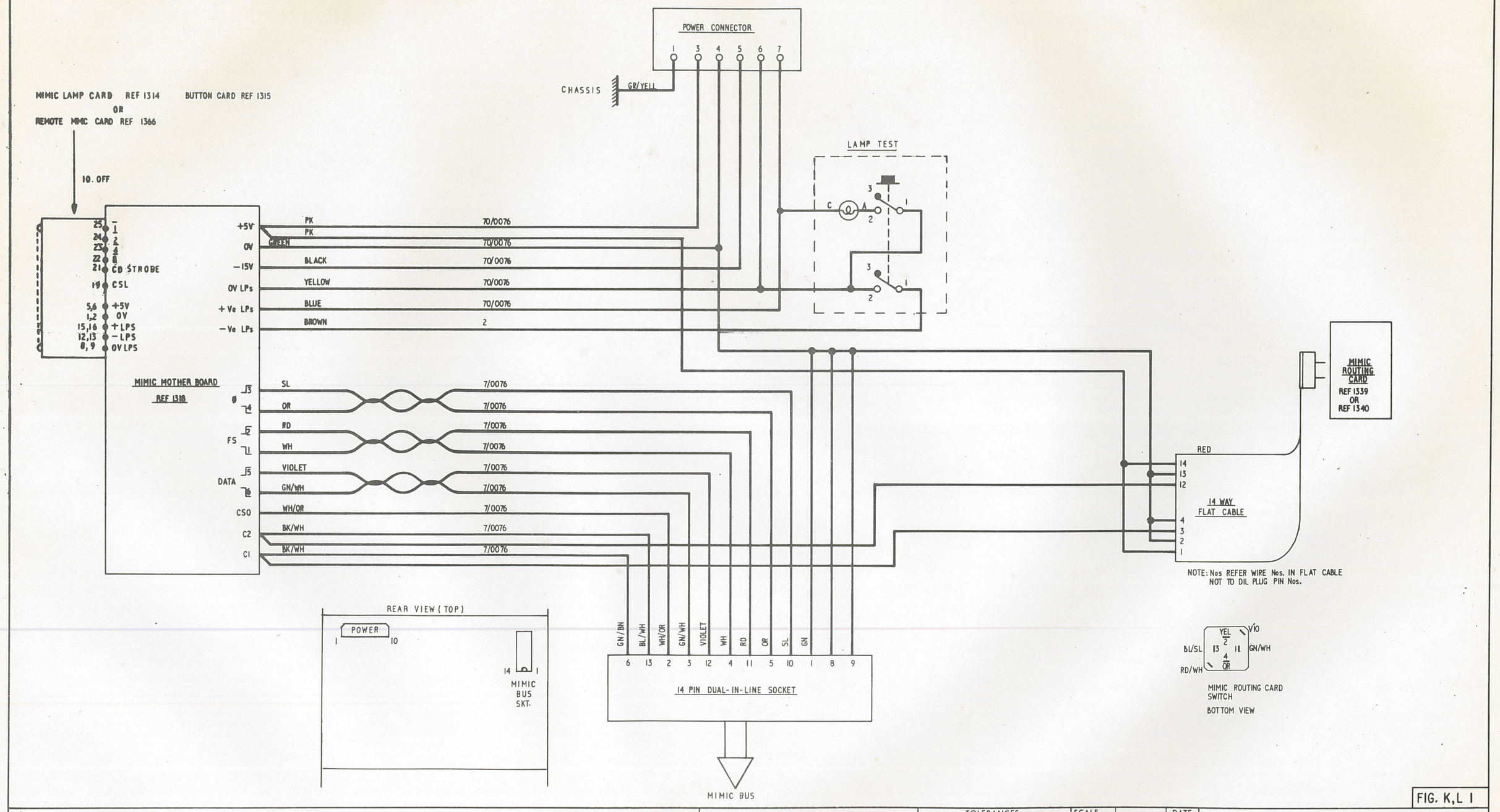

FIG. K,L 1

REV. 1. C.Nº

RANK STRAND ELECTRIC
PO Box 70 Great West Road Brentford Middlesex TW8 9HR
Telephone 01-568 9222 Telex 24408
A DIVISION OF
RANK AUDIO VISUAL LIMITED

DIMENSIONS IN INCHES/MILLIMETRES
THIRD ANGLE PROJECTION

TOLERANCES	
IMPERIAL	METRIC
FRACTION ± 1/64"	1 DEC PLACE ± 0·4 mm
DECIMAL ± ·005"	2 DEC PLACE ± 0·1 mm
ANGULAR ± 0·25°	
UNLESS OTHERWISE STATED	
USED ON :-	

SCALE		DATE
DRAWN	T.T.C.	13-2-74
CHECKED	DRB	11/6/74
APPROVED	DRB	11/6/74
MATERIAL :-		
FINISH :-		

TITLE :-
MMS-LAMP AND BUTTON
MIMIC MODULE
WIRING DIAGRAM

ISSUE A | DWG. Nº 7B13513

DWG. Nº 6A12403 | ISSUE ÞE

MIMIC BUS (PINS)

Ø A17 A16 — FS A13 A14 — DATA A18 A19 — CS0 A15 — C1 A12 — C2 A11

IC1 IC14 R1 R2 R3 R4 R5 R36 330Ω C11 330pF R37 330Ω C10 330pF

IC2 R6 R7 R8 IC3 R19 1K R9 10K R10 22K R11 1K R12 2K2 R13 1K R15 1K R4 1K R16 2K2 R17 2K2 R39 1K C12 0·01μF DISC R40 330R VT4 BC184 VT1 VT3 BC184 R18 1K R38 2K2

IC4 R20 1K

IC5 R21 1K R22 10K C5 100pF R23 10K C6 0·01μF 460nS 28μS

IC6 IC7 IC8 IC9 R24 1K IC3 IC10 IC11 IC12 IC13 R26 1K LINK TO INTERLACE

IC4 R25 1K C7 68μF 6·3V R31 1K BC184 VT2 R32 10K R33 10K D2 15V20

R27 R28 R29 R30 10K

THUMBWHEEL SW1 — CHANNEL BLOCK SELECT — COMMON

D1 BZY 88 5V1 C8 0·01μF R34 330Ω 1W R35 1K

+5V 5,6 — 0V 1,2 — +Ve LPs 15,16 — −Ve LPs 12,13 — 0V LPs 8,9

22 $\overline{6}$ — 23 $\overline{4}$ — 24 $\overline{2}$ — 25 T — 19 CSL — 1…10 CARD STROBES (28) PIN 21 ON EACH EDGE CONNECTOR

CARD ADDS

LAMP & BUTTON CARD SOCKET

20 LAMP DATA

DATA FS

−15V A10 — +Ve LPs A8,9 — 0V LPs A5,6 — 0V A1,2 — +5V A3,4 — −Ve LPS A7

C9 C4 C3 C2 0·01μF — C1 22μF 25V

INTEGRATED CIRCUITS			
IC REF No.	TYPE	+Vcc	GRD
IC 5	SN74123N	16	8
IC 13	SN74154N	24	12
IC 1,2	SN75107N	14	7
IC 7	SN7492N	5	10
IC 6, 8	SN7490N	5	10
IC 11	SN7486N	14	7
IC 10	SN7440N	14	7
IC 12	SN7437N	14	7
IC 4	SN7474N	14	7
IC 3	SN7401N	14	7
IC 9	SN7400N	14	7
IC 14	SN7414N	14	7

SCHEDULE 5S12404
PCBOARD 5A12405

FIG K,L 2

REV J C.N.T. 7350. 12.9.75 WAS G.C.B. 15.9.75 WAS G.C.B. 17.11.75 WAS 10K Ω. REV K 22.12.75 WAS 10K Ω. REV L 13.1.76 WAS 22K Ω. REV M 27.2.76 R39 WAS 2K2 R39 ADDED C12 ADDED VT4 ADDED IC9 CHANGED 13.5.76 ISSUE ÞE 12.7.76

RANK STRAND ELECTRIC
PO Box 70 Great West Road Brentford Middlesex TW8 9HR
Telephone 01-568 9222 Telex 24408
A DIVISION OF
RANK AUDIO VISUAL LIMITED

DIMENSIONS IN INCHES/MILLIMETRES
THIRD ANGLE PROJECTION

TOLERANCES		SCALE		DATE
IMPERIAL	METRIC	DRAWN	T.T.C.	7.6.73
FRACTION ± 1/64"	1 DEC PLACE ± 0·4mm	CHECKED	P.R.B	11.6.73
DECIMAL ± .005	2 DEC PLACE ± 0·1mm	APPROVED	R.C.V	11/6/76
ANGULAR ± 0·25°		MATERIAL :-		
UNLESS OTHERWISE STATED				
USED ON :-		FINISH :-		

TITLE :-
MMS LAMP & BUTTON 120 WAY MIMIC MOTHERBOARD CIRCUIT DIAGRAM
PCB 289/3 REF 1318
ISSUE ÞE DWG. Nº 6A12403

DWG. Nº 6C13260	ISSUE AB

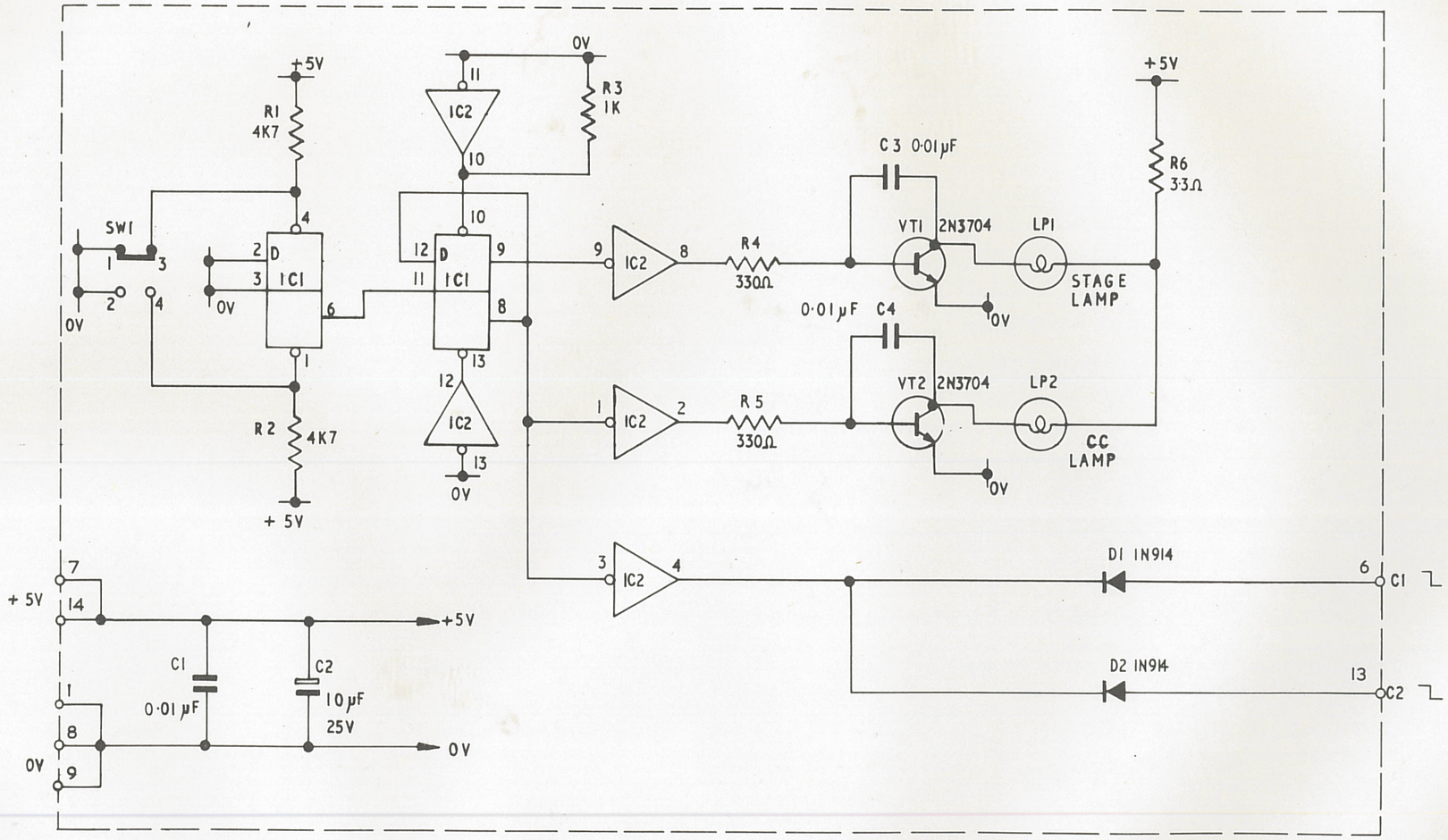

IC1 SN7474N
IC2 SN7404N

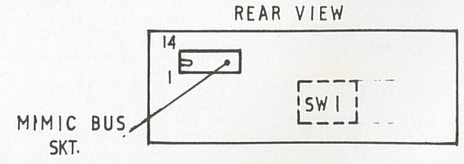

SCHEDULE 5S13396
P. C. BOARD 5C13397

FIG. K,L3

REV.1. C.N°E1628 IC1-PIN 11 WAS CONNECTED TO PIN 5. NEW ISS. B. 27.3.74 D.B.

RANK STRAND ELECTRIC
PO Box 70 Great West Road Brentford Middlesex TW8 9HR
Telephone 01-568 9222 Telex 24408
A DIVISION OF
RANK AUDIO VISUAL LIMITED

DIMENSIONS IN INCHES/MILLIMETRES
THIRD ANGLE PROJECTION

TOLERANCES	
IMPERIAL	METRIC
FRACTION ± 1/64"	1 DEC PLACE ± 0·4 mm
DECIMAL ± ·005"	2 DEC PLACE ± 0·1 mm
ANGULAR ± 0·25°	
UNLESS OTHERWISE STATED	

USED ON :- MMS MIMIC MODULE

SCALE		DATE
DRAWN	D.O'C	8·12·73
CHECKED		24.9.74
APPROVED		24.9.74

MATERIAL :-
FINISH :-

TITLE :-
MMS SINGLE BUTTON MIMIC ROUTING
CIRCUIT DIAGRAM
PCB 313/1 REF 1339

ISSUE AB | DWG. Nº 6C 13260

CWG A.S.

DWG. Nº 6C13398 | ISSUE A

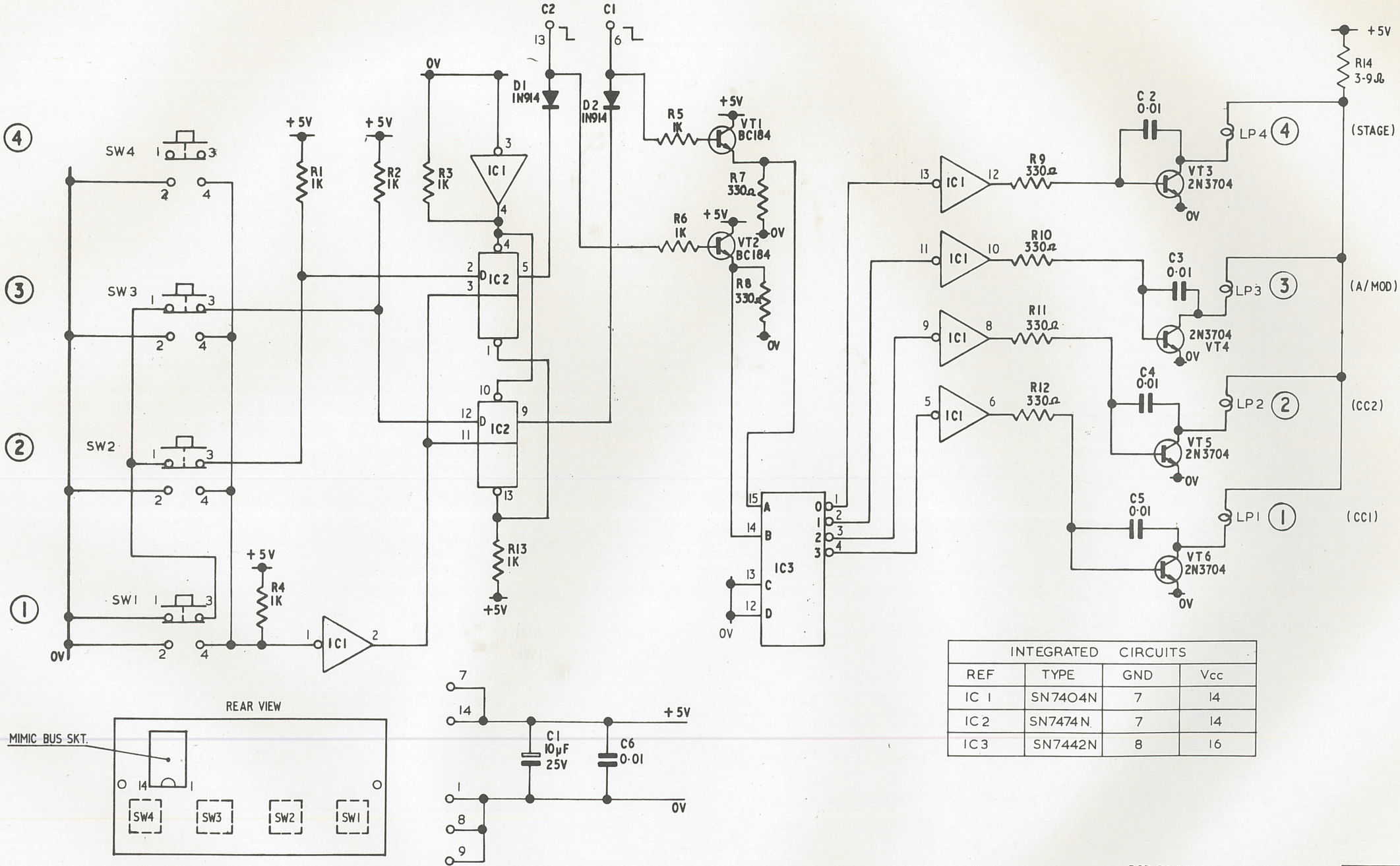

INTEGRATED CIRCUITS			
REF	TYPE	GND	Vcc
IC 1	SN7404N	7	14
IC 2	SN7474N	7	14
IC 3	SN7442N	8	16

PCB DRAWING 5C13400
SCHEDULE 5S13399

FIG K.L4

REV.1. C.Nº

RANK STRAND ELECTRIC
PO Box 70 Great West Road Brentford Middlesex TW8 9HR
Telephone 01-568 9222 Telex 24408
A DIVISION OF
RANK AUDIO VISUAL LIMITED

DIMENSIONS IN INCHES/MILLIMETRES
THIRD ANGLE PROJECTION

TOLERANCES	
IMPERIAL	METRIC
FRACTION ± 1/64"	1 DEC PLACE ± 0·4 mm
DECIMAL ± ·005"	2 DEC PLACE ± 0·1 mm
ANGULAR ± 0·25°	
UNLESS OTHERWISE STATED	

USED ON :- IL12562

		DATE
SCALE		
DRAWN	G.W.FAGE.	5·1·74
CHECKED	D.R.B.	11/6/74
APPROVED	W.R.B.	11/6/74

MATERIAL :-

FINISH :-

TITLE :- M M S 4 WAY MIMIC ROUTING.

REF. 1340 PCB 314

ISSUE A

DWG. Nº 6C13398

CWG & S

DWG. Nº 6A12340 | ISSUE A

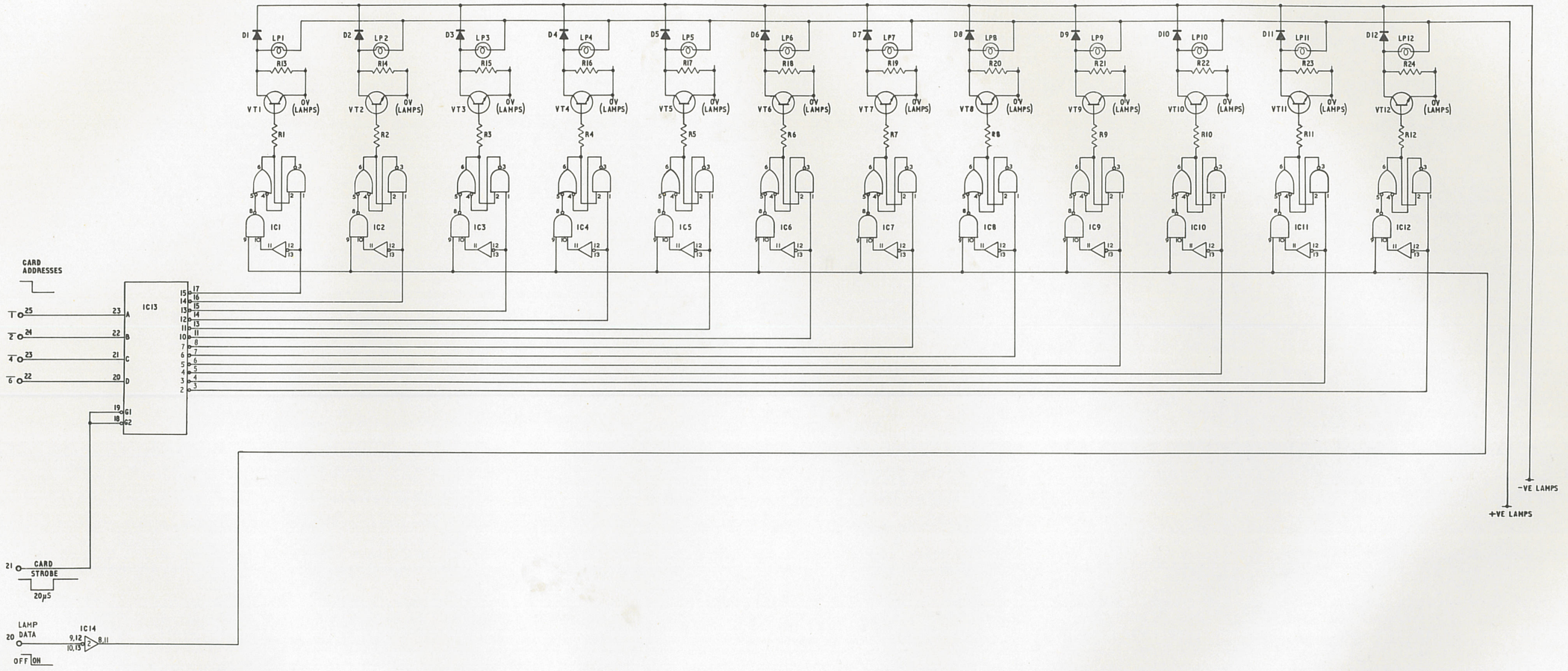

NOTES
1 ALL RESISTORS ARE 470Ω, 1/3 W, 5%, UNLESS OTHERWISE STATED
2 ALL DIODES ARE 1S920
3 ALL TRANSISTORS ARE BC184
4 ALL CAPACITORS ARE 0·01μf, UNLESS OTHERWISE STATED
5 ALL LAMPS ARE 6V 100mA max

INTEGRATED CIRCUIT			
REF	TYPE	+VCC	GDN
IC1 – 12,14	SN7400N	PIN 14	PIN 7
IC13	SN74154N	" 24	" 12

SCHEDULE 5S12341
P.C.BOARD 278 5A12342

FIG. K5

REV.| C.Nº

RANK STRAND ELECTRIC
PO Box 70 Great West Road Brentford Middlesex TW8 9HR
Telephone 01-568 9222 Telex 24408
A DIVISION OF
RANK AUDIO VISUAL LIMITED

DIMENSIONS IN INCHES/MILLIMETRES
THIRD ANGLE PROJECTION

TOLERANCES	
IMPERIAL	METRIC
FRACTION ± 1/64"	1 DEC PLACE ± 0·4mm
DECIMAL ± ·005"	2 DEC PLACE ± 0·1mm
ANGULAR ± 0·25°	
UNLESS OTHERWISE STATED	
USED ON :-	

		DATE
SCALE		
DRAWN	Whalley	15-6-76
CHECKED	D.R.G.	11/6/76
APPROVED	D.R.G.	11/6/76
MATERIAL :-		
FINISH :-		

TITLE :-
MMS MIMIC 12 WAY LAMP CARD
CIRCUIT DIAGRAM
REF 1314 PCB 278/1
ISSUE A | DWG. Nº 6A12340

DWG. Nº 6AI3877 | ISSUE A

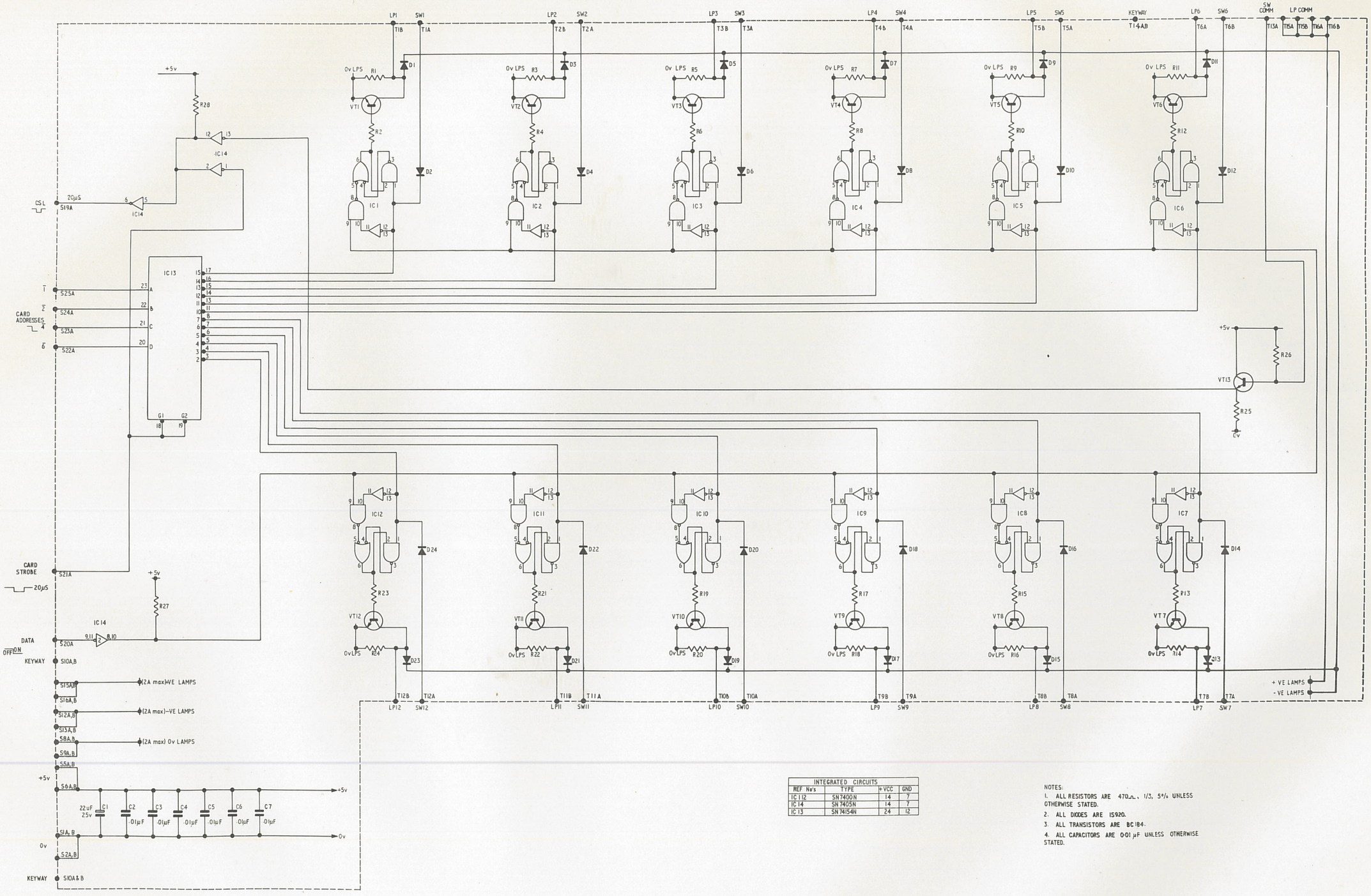

INTEGRATED CIRCUITS			
REF No's	TYPE	+VCC	GND
IC 1 12	SN 7400N	14	7
IC 14	SN 7405N	14	7
IC 13	SN 74154N	24	12

NOTES:
1. ALL RESISTORS ARE 470Ω, 1/3, 5% UNLESS OTHERWISE STATED.
2. ALL DIODES ARE IS920.
3. ALL TRANSISTORS ARE BC184.
4. ALL CAPACITORS ARE 0·01 µF UNLESS OTHERWISE STATED.

SCHEDULE: 5SI3878
P.C.BOARD: 5AI3879

FIG. K,L6

RANK STRAND ELECTRIC PO Box 70 Great West Road Brentford Middlesex TW8 9HR Telephone 01-568 9222 Telex 24408 A DIVISION OF RANK AUDIO VISUAL LIMITED	TOLERANCES IMPERIAL / METRIC FRACTION ± 1/64" / 1 DEC PLACE ± 0·4mm DECIMAL ± ·005" / 2 DEC PLACE ± 0·1mm ANGULAR ± 0·25° UNLESS OTHERWISE STATED USED ON:-	SCALE DRAWN CHECKED DR APPROVED MATERIAL:- FINISH:-	DATE 11/4/74 11/6/74	TITLE:- MMS MIMIC 12 WAY REMOTE MIMIC CARD CIRCUIT DIAGRAM PCB346/1 REE1366 ISSUE A DWG. Nº 6AI3877
DIMENSIONS IN INCHES/MILLIMETRES THIRD ANGLE PROJECTION				

C.Nº
REV.I

DWG. Nº 6BI2337	ISSUE AB

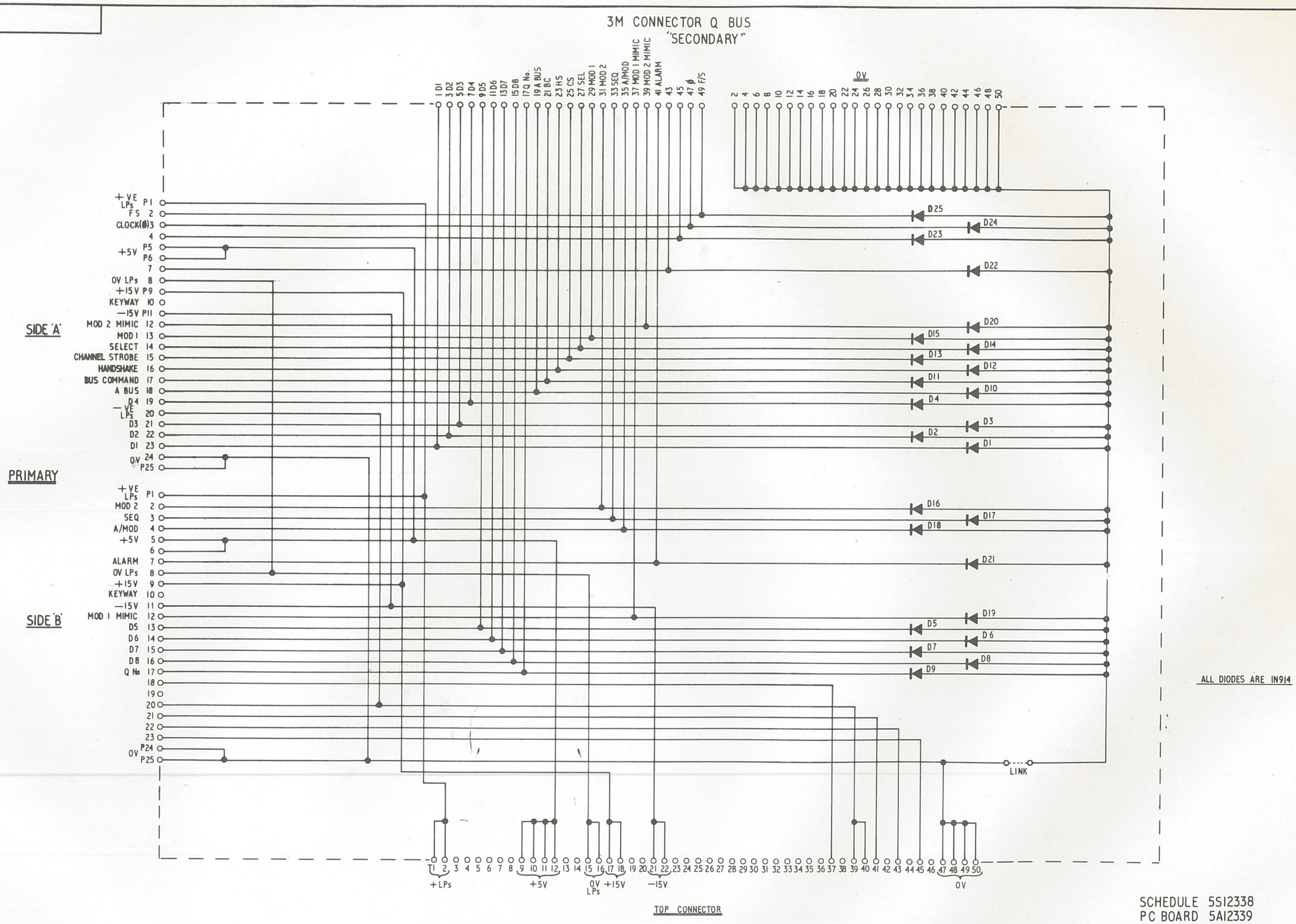

SCHEDULE 5SI2338
PC BOARD 5AI2339

FIG. D,E,F,G,H
J,M,R,S,2.

REV.: C.Nº

RANK STRAND ELECTRIC
PO Box 70 Great West Road Brentford Middlesex TW8 9HR
Telephone 01-568 9222 Telex 24408
A DIVISION OF
RANK AUDIO VISUAL LIMITED

DIMENSIONS IN INCHES/MILLIMETRES
THIRD ANGLE PROJECTION

TOLERANCES		SCALE		DATE
IMPERIAL	METRIC	DRAWN	T.T.C.	26-7-73
FRACTION ± 1/64"	1 DEC PLACE ± 0·4 mm	CHECKED	D.R.S.	4/8/74
DECIMAL ± ·005"	2 DEC PLACE ± 0·1 mm	APPROVED	D.R.S.	4/8/74
ANGULAR ± 0·25°		MATERIAL:-		
UNLESS OTHERWISE STATED				
USED ON:-		FINISH:-		

TITLE:-
MMS MODULE BUS CONNECT CARD
CIRCUIT DIAGRAM
REF 1313 PCB 277/3

ISSUE AB | DWG. Nº 6BI2337

DWG. Nº 7A12327 | ISSUE [illegible]

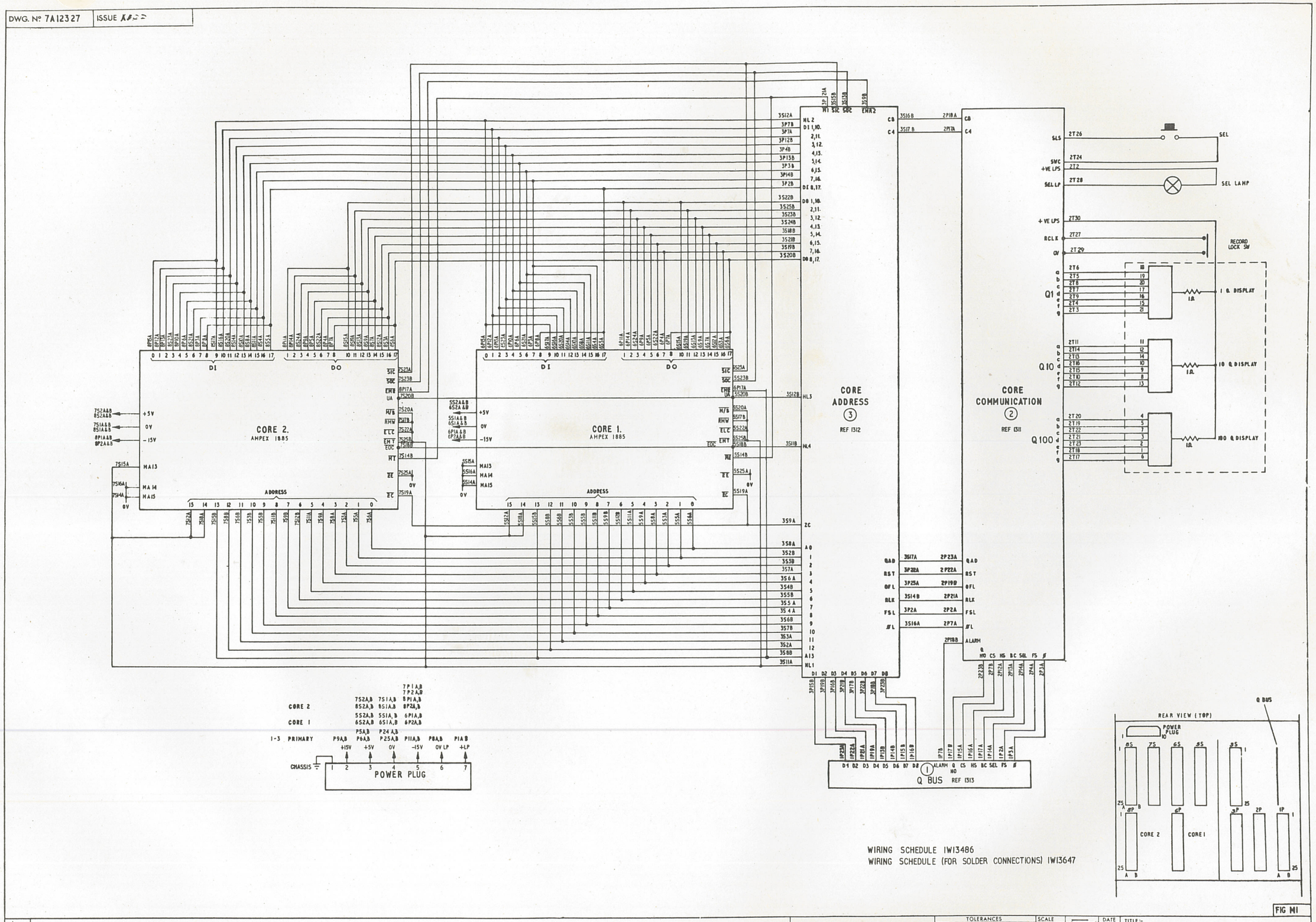

WIRING SCHEDULE 1W13486
WIRING SCHEDULE (FOR SOLDER CONNECTIONS) 1W13647

FIG M1

REV.1 C.Nº
Pin Nos ADDED
T.T.C. 27-6-73

RANK STRAND ELECTRIC
PO Box 70 Great West Road Brentford Middlesex TW8 9HR
Telephone 01-568 9222 Telex 24408
A DIVISION OF
RANK AUDIO VISUAL LIMITED

DIMENSIONS IN INCHES/MILLIMETRES
THIRD ANGLE PROJECTION

TOLERANCES	
IMPERIAL	METRIC
FRACTION ± 1/64"	1 DEC PLACE ± 0·4 mm
DECIMAL ± ·005"	2 DEC PLACE ± 0·1 mm
ANGULAR ± 0·25°	
UNLESS OTHERWISE STATED	
USED ON :-	

SCALE	—	DATE
DRAWN	[illegible]	26.8.73
CHECKED	[illegible]	13/6/74
APPROVED	[illegible]	13/6/74
MATERIAL :-	—	
FINISH :-	—	

TITLE :- MMS CORE STORE WIRING DIAGRAM.

ISSUE [illegible] | DWG. Nº 7A12327

DWG. Nº 6C12334	ISSUE A B C

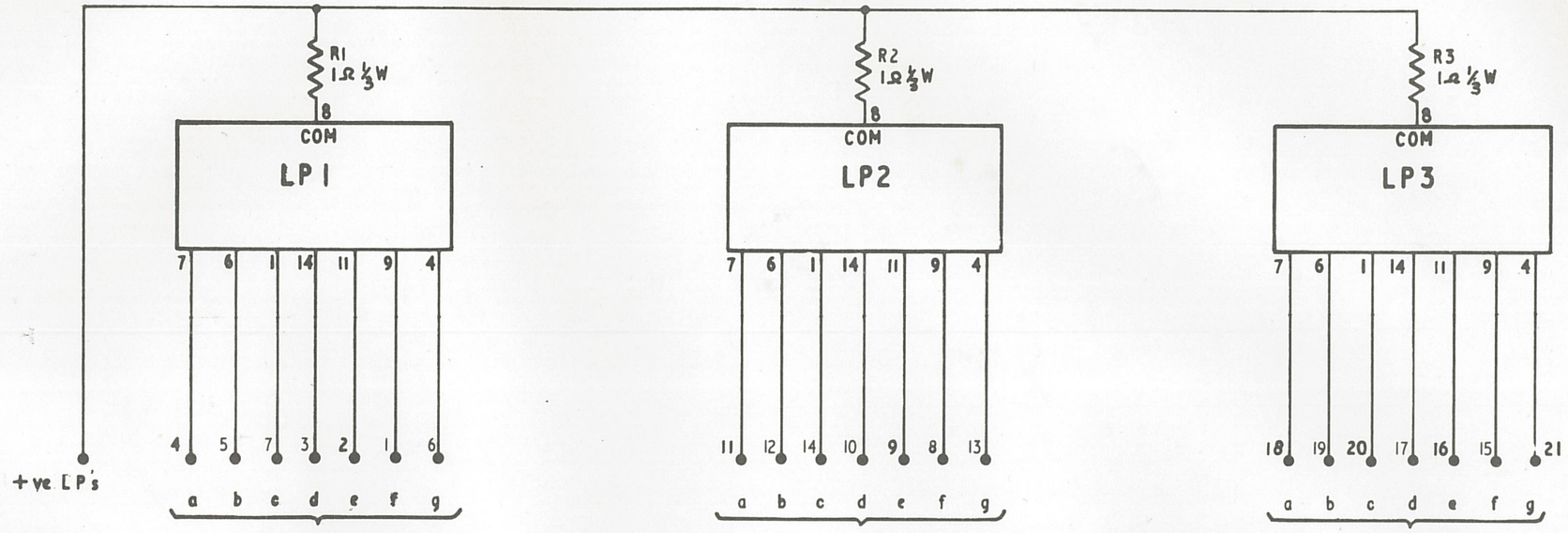

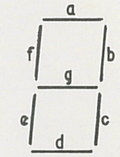

LETTERED SEGMENTS
AS FOR SN 7447N.

NOTE:
ALL LP's ARE KGM MS 141

PC BOARD DRG. No. 5C12336
SCHEDULE 5S12335

FIG. D, E, F, G, H
J, M, R, S, 3

REV.1. C.N°. C.N° E/1935. 1 OHM RESISTOR WAS 10HM. ½W. 19.12.74

RANK STRAND ELECTRIC
PO Box 70 Great West Road Brentford Middlesex TW8 9HR
Telephone 01-568 9222 Telex 24408
A DIVISION OF
RANK AUDIO VISUAL LIMITED

DIMENSIONS IN INCHES/MILLIMETRES
THIRD ANGLE PROJECTION

TOLERANCES	
IMPERIAL	METRIC
FRACTION ± 1/64"	1 DEC PLACE ± 0·4 mm
DECIMAL ± ·005"	2 DEC PLACE ± 0·1 mm
ANGULAR ± 0·25°	
UNLESS OTHERWISE STATED	

USED ON :-

SCALE	—	DATE
DRAWN	G. HAYWARD	13·4·73
CHECKED		14.5.74
APPROVED		14/5/74

MATERIAL :-

FINISH :-

TITLE :-

MMS DISPLAY CARD CIRCUIT DIAGRAM.

PCB 272 REF 1310

ISSUE A B C

DWG. Nº 6C12334

CWG 8.8.

DWG. Nº 6A12324 | ISSUE ~~A~~ ~~B~~ ~~C~~ D

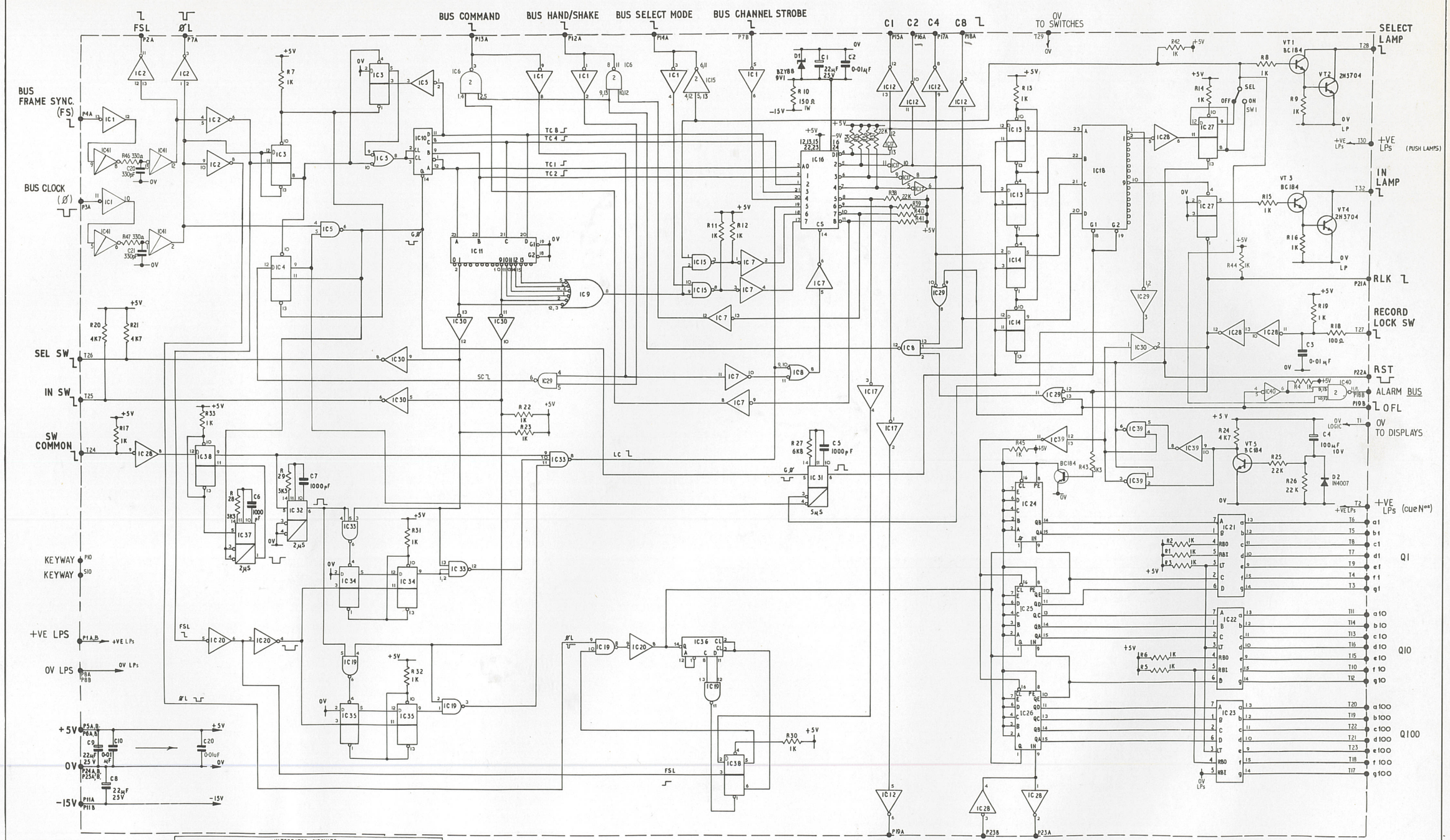

INTEGRATED CIRCUITS				
REF. No	TYPE	-5V	-9V	GDN.
IC 1, 28.	DTL 936	PIN 14		PIN 7
IC 2.	SN 7437N	" 14		" 7
IC 3,4,13,14, 27, 34, 35, 38.	SN 7474N	" 14		" 7
IC , 8, 33.	SN 7410N	" 14		" 7
IC 5, 19, 29, 39.	SN 7400N	" 14		" 7
IC 7, 12, 17, 20.	SN 7404N	" 14		" 7
IC 9.	SN 7430N	" 14		" 7
IC 10, 36.	SN 7493N	" 5		" 10
IC 11, 18.	SN 74154N	" 24		" 12
IC 16.	ROM INTEL 1702/PB	" 24	PIN 12	—
IC 21, 22, 23.	SN 7447N	" 14		PIN 7 0V LPs
IC 24, 25, 26.	SN 7496N	" 5		" 12
IC 30.	SN 7405N	" 14		" 7
IC 31, 32, 37.	SN 74121N	" 14		" 7
IC 6, 15, 40.	SN 7438N	" 14		" 7
IC 41	SN 7414N	" 14		" 7

PC BOARD DRG. No 5B12326
SCHEDULE 5S12325

FIG M4

REV.1 C.Nº
IC15/13 WAS IC15/15
A,B,C,D IDENTS ON
IC'S 21, 22, 23
CHANGED
12.11.74

RANK STRAND ELECTRIC
PO Box 70 Great West Road Brentford Middlesex TW8 9HR
Telephone 01-568 9222 Telex 24408
A DIVISION OF
RANK AUDIO VISUAL LIMITED

DIMENSIONS IN INCHES/MILLIMETRES
THIRD ANGLE PROJECTION

TOLERANCES	
IMPERIAL	METRIC
FRACTION ± 1/64"	1 DEC PLACE ± 0·4 mm
DECIMAL ± ·005"	2 DEC PLACE ± 0·1 mm
ANGULAR ± 0·25°	
UNLESS OTHERWISE STATED	
USED ON :-	

SCALE		DATE
DRAWN	[signature]	31-3-73
CHECKED	[signature]	13/6/74
APPROVED	[signature]	15/6/74
MATERIAL :-	—	
FINISH :-	—	

TITLE :- MMS - CORE MODULE
BUS COMMUNICATION
CIRCUIT DIAGRAM

PCB 273/3 REF 1311

ISSUE ~~A~~ ~~B~~ ~~C~~ D | DWG. Nº 6A12324

DWG. Nº 6A12328 | ISSUE E

INTEGRATED CIRCUITS					
REF	TYPE	Vcc 1	Vcc 2	Vcc 3	GND
IC13,22,	DM936	14			7
IC8,11,18,	SN7400N	14			7
IC6,52	SN7414N	14			7
IC7	SN7413N	14			7
IC3,12,14,21,23, 32,39,41,	SN7437N	14			7
IC31,40,49,51,	SN7438N	14			7
IC2,9,17,	SN7474N	14			7
IC16,25,34,43,	SN7483N	5			12
IC19,20,	SN7485N	16			8
IC10,36,45,	SN7493N	5			10
IC1	SN72741N	—	7	4	—
IC4,5,	SN74121N	14			7
IC28,37,46,	SN74192N	16			8
IC15,24,29,33, 35,38,42,44, 47,	SN74194N	16			8
IC26,27,48	SN7475N	5			12
IC30	SN7410N	14			7
IC50	SN74123N	16			8

CORE DATA IN

CORE DATA OUT

DATA BUS
DI ⌐ LSB
D2
D3
D4
D5
D6
D7
D8 ⌐ MSB

EMR2
EMR1, A13
A12
A11
A10
A9
A8
A7
A6
A5
A4
A3
A2
A1
A0
ZC
FSL
QAD
ØL
DI
QØ
3 MHz
BRW
RST
MI
OFL

IC1 IC2 IC3 IC4 IC5 IC6 IC7 IC8 IC9 IC10 IC11 IC12 IC13 IC14 IC15 IC16 IC17 IC18 IC19 IC20 IC21 IC22 IC23 IC24 IC25 IC26 IC27 IC28 IC29 IC30 IC31 IC32 IC33 IC34 IC35 IC36 IC37 IC38 IC39 IC40 IC41 IC42 IC43 IC44 IC45 IC46 IC47 IC48 IC49 IC50 IC51 IC52

Q LIMIT THUMBWHEELS '10' '100'

SW1 SW2

+15V Vcc 2
+5V Vcc 1
-15V Vcc 3

HL1 HL2 HL3 HL4

RLK SIC KEYWAY SOC

P.C. BOARD DRG. No. 5B12330
SCHEDULE 5512329

FIG. M5

REV.I C.N° 61846 Ras Deleted, IC50, 11&3 Connected. 16-10-74 Rgbr.

RANK STRAND ELECTRIC
PO Box 70 Great West Road Brentford Middlesex TW8 9HR
Telephone 01-568 9222 Telex 24408
A DIVISION OF
RANK AUDIO VISUAL LIMITED

DIMENSIONS IN INCHES/MILLIMETRES
THIRD ANGLE PROJECTION

TOLERANCES		SCALE	—	DATE
IMPERIAL	METRIC	DRAWN	G.B.H.	11-4-73
FRACTION ± 1/64"	1 DEC PLACE ± 0·4 mm	CHECKED	B.P.H.	13/4/74
DECIMAL ± ·005"	2 DEC PLACE ± 0·1 mm	APPROVED	B.P.H.	15/4/74
ANGULAR ± 0·25°		MATERIAL:-		
UNLESS OTHERWISE STATED		FINISH:-		
USED ON:-				

TITLE:-
MMS CORE MODULE
CORE ADDRESS
CIRCUIT DIAGRAM
REF. 1312

PCB 274/6
ISSUE E
DWG. Nº 6A12328

DWG. Nº 7B13468	ISSUE ~~C~~ D

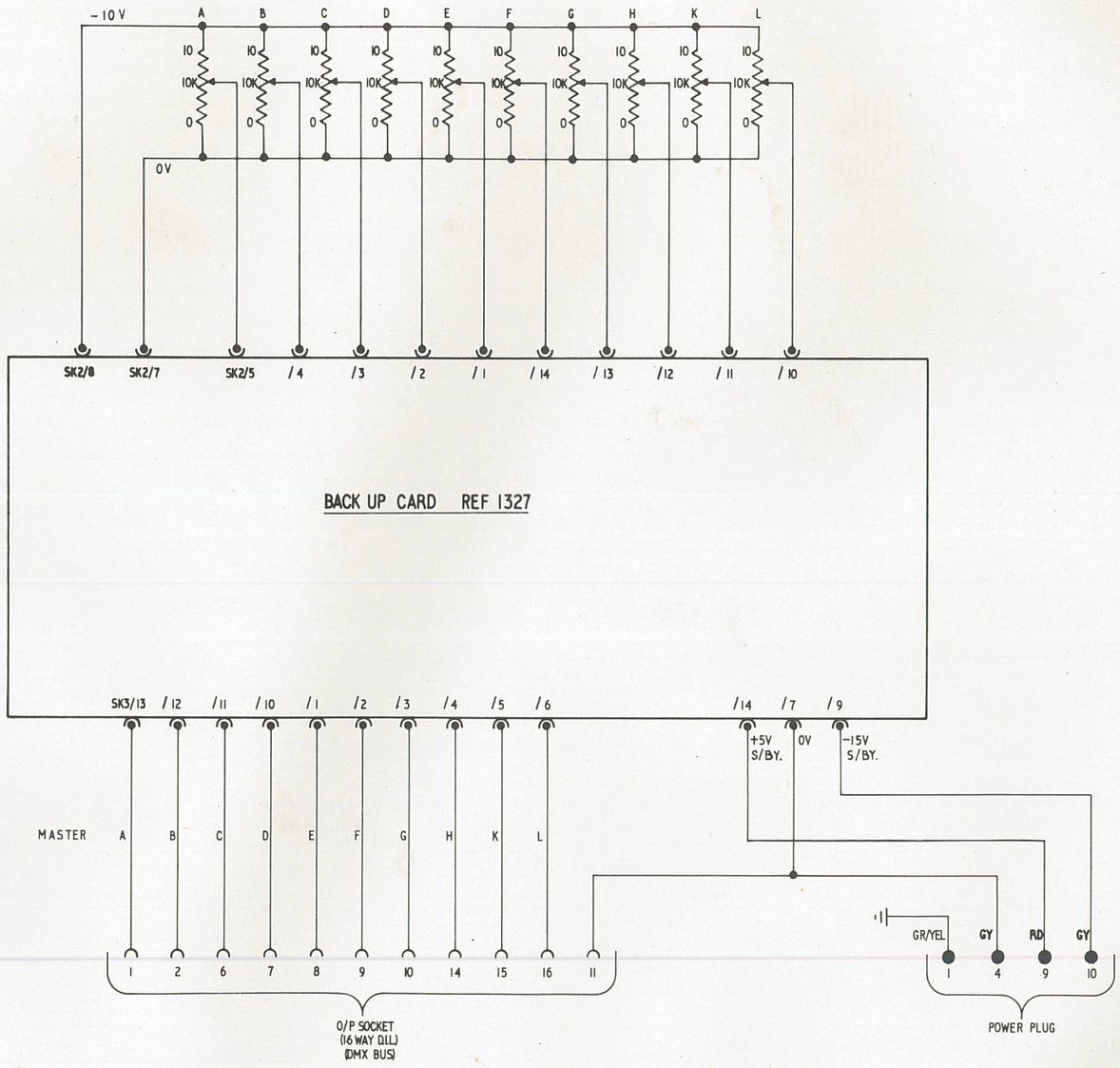

FIG N1

REV. 1. C. Nº 1840	REV 2 C No. E2277
Power Plug, Colour Code Rectifications. 14-10-74 14/10/74	SK2/15 WAS SK2/13 18.9.75 18-9-75

RANK STRAND ELECTRIC
PO Box 70 Great West Road Brentford Middlesex TW8 9HR
Telephone 01-568 9222 Telex 24408
A DIVISION OF
RANK AUDIO VISUAL LIMITED

DIMENSIONS IN INCHES/MILLIMETRES
THIRD ANGLE PROJECTION

TOLERANCES	
IMPERIAL	METRIC
FRACTION ± 1/64"	1 DEC PLACE ± 0·4 mm
DECIMAL ± ·005"	2 DEC PLACE ± 0·1 mm
ANGULAR ± 0·25°	
UNLESS OTHERWISE STATED	
USED ON :-	

SCALE		DATE
DRAWN		12·6·74
CHECKED	DRB	14/6/74
APPROVED	DRB	14/6/74
MATERIAL :-		
FINISH :-		

TITLE :- MMS BACK UP MODULE STANDARD WIRING DIAGRAM

ISSUE ~~C~~ D | DWG. Nº 7B13468

DWG. Nº 7B 13467	ISSUE B

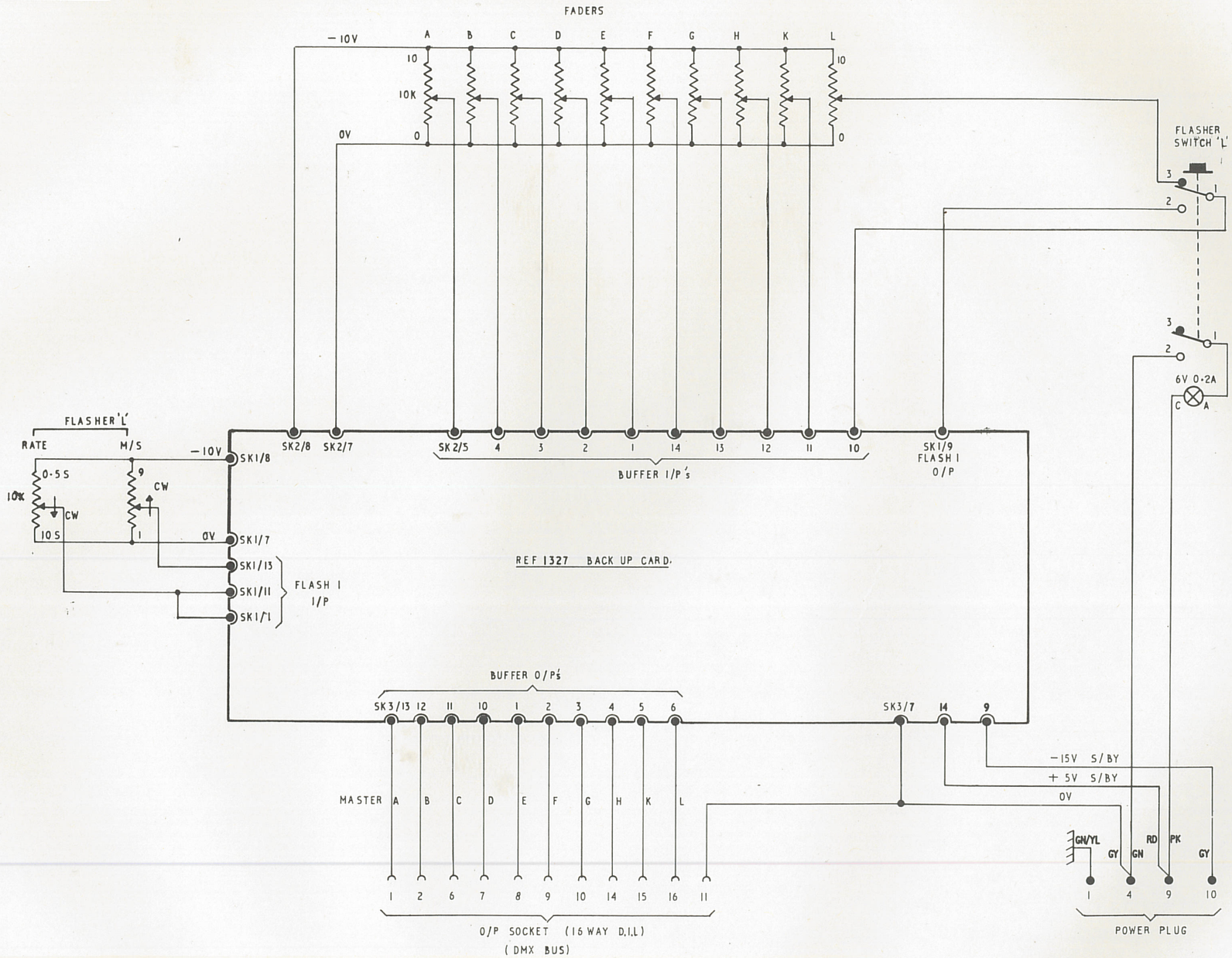

FIG. N2.

REV.1 C.Nº1840 Power Plug, Colour Code Rectifications. 14-10-74 14-10-74

RANK STRAND ELECTRIC
PO Box 70 Great West Road Brentford Middlesex TW8 9HR
Telephone 01-568 9222 Telex 24408
A DIVISION OF
RANK AUDIO VISUAL LIMITED

DIMENSIONS IN INCHES/MILLIMETRES
THIRD ANGLE PROJECTION

TOLERANCES		SCALE	—	DATE
IMPERIAL	METRIC	DRAWN	G H	13,6,74
FRACTION ± 1/64"	1 DEC PLACE ± 0·4 mm	CHECKED	DAB	14/6/74
DECIMAL ± ·005"	2 DEC PLACE ± 0·1 mm	APPROVED	DAB	14/6/74
ANGULAR ± 0·25°		MATERIAL :-		
UNLESS OTHERWISE STATED				
USED ON :-		FINISH :-		

TITLE :-
MMS BACK UP MASTER MODULE
1 FLASHER.

ISSUE B | DWG. Nº 7B 13467

DWG. Nº 7B 12555 | ISSUE B

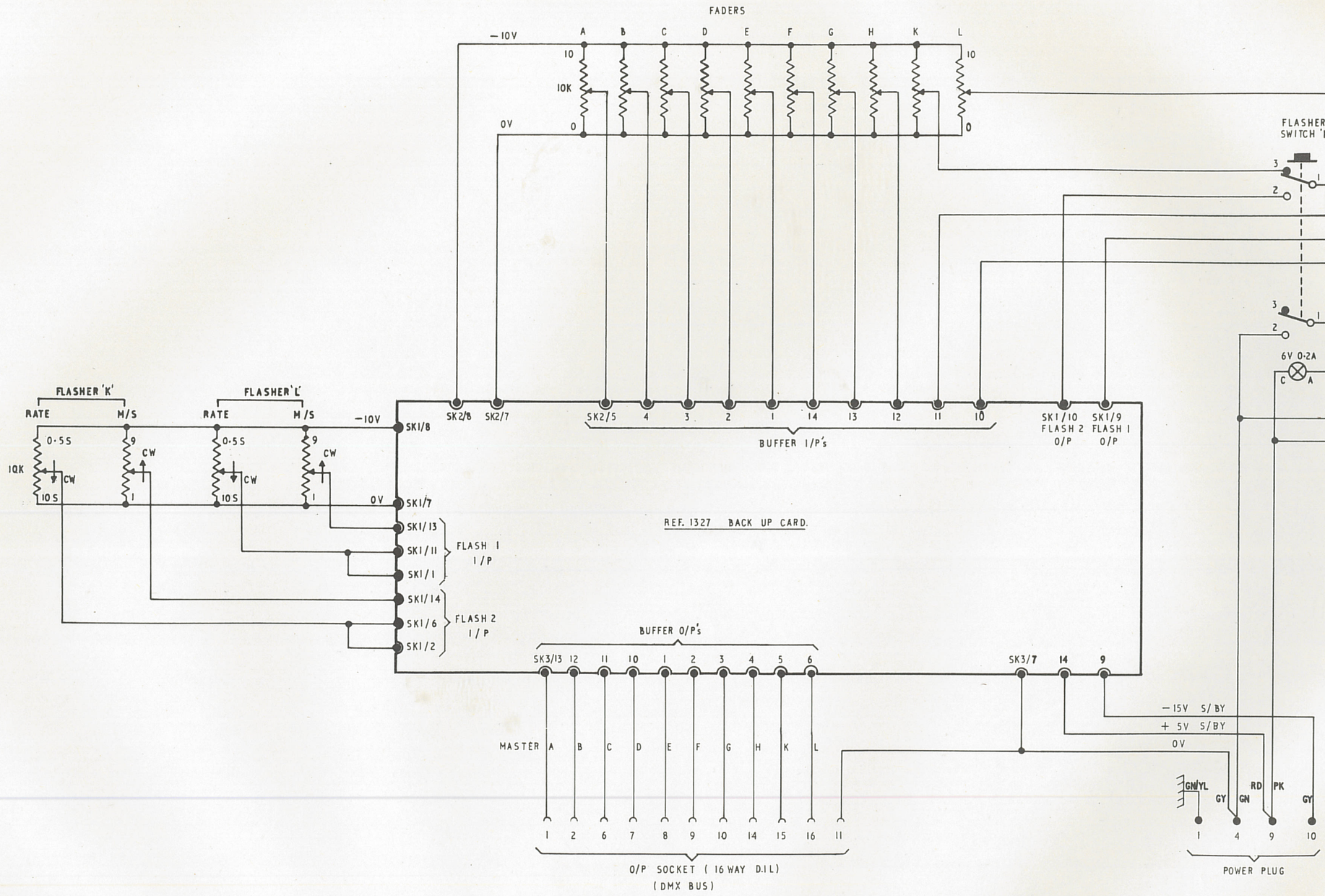

FIG N3

REV.J C.N° 1840 Power Plug, Colour Code Rectifications. 14-10-74 14/10/74

RANK STRAND ELECTRIC
PO Box 70 Great West Road Brentford Middlesex TW8 9HR
Telephone 01-568 9222 Telex 24408
A DIVISION OF
RANK AUDIO VISUAL LIMITED

DIMENSIONS IN INCHES/MILLIMETRES
THIRD ANGLE PROJECTION

TOLERANCES	
IMPERIAL	METRIC
FRACTION ± 1/64"	1 DEC PLACE ± 0·4 mm
DECIMAL ± ·005"	2 DEC PLACE ± 0·1 mm
ANGULAR ± 0·25°	
UNLESS OTHERWISE STATED	
USED ON :-	

SCALE	——	DATE
DRAWN	G H	13.6.74
CHECKED	D P B	14/6/74
APPROVED	D P B	14/6/74
MATERIAL :-		
FINISH :-		

TITLE :- MMS BACK UP MASTER MODULE 2. FLASHER.

ISSUE B | DWG. Nº 7B 12555

DWG. Nº 6A12595 | ISSUE ¢D

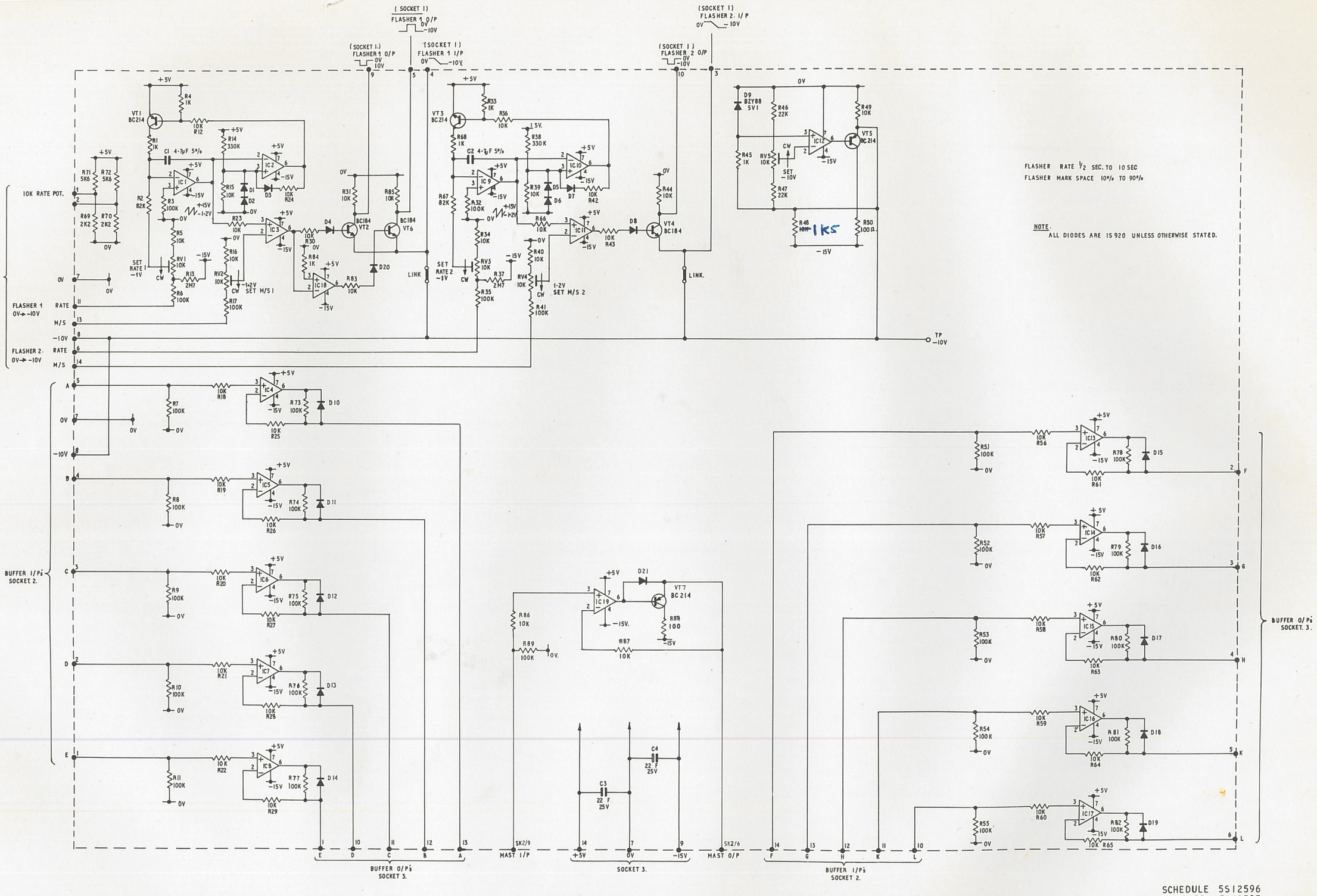

SCHEDULE 5S12596
PC BOARD. 5A12597

FIG. NN4

REV. 1. C.Nº 21700
Flasher With Anti-Phase facility Improves.
22-7-74

RANK STRAND ELECTRIC
PO Box 70 Great West Road Brentford Middlesex TW8 9HR
Telephone 01-568 9222 Telex 24408
A DIVISION OF
RANK AUDIO VISUAL LIMITED

DIMENSIONS IN INCHES/MILLIMETRES
THIRD ANGLE PROJECTION

TOLERANCES				
IMPERIAL	METRIC	SCALE		DATE
FRACTION ± 1/64"	1 DEC PLACE ± 0·4 mm	DRAWN	G.H.	18.4.74
DECIMAL ± ·005"	2 DEC PLACE ± 0·1 mm	CHECKED		
ANGULAR ± 0·25°		APPROVED		
UNLESS OTHERWISE STATED		MATERIAL :-		
USED ON :-		FINISH :-		

TITLE :- MMS BACK UP CARD (MK. II)
CIRCUIT DIAGRAM.
PCB 297/2 REF 1327

ISSUE ¢D | DWG. Nº 6A12595

DWG. Nº 7B14764 | ISSUE A

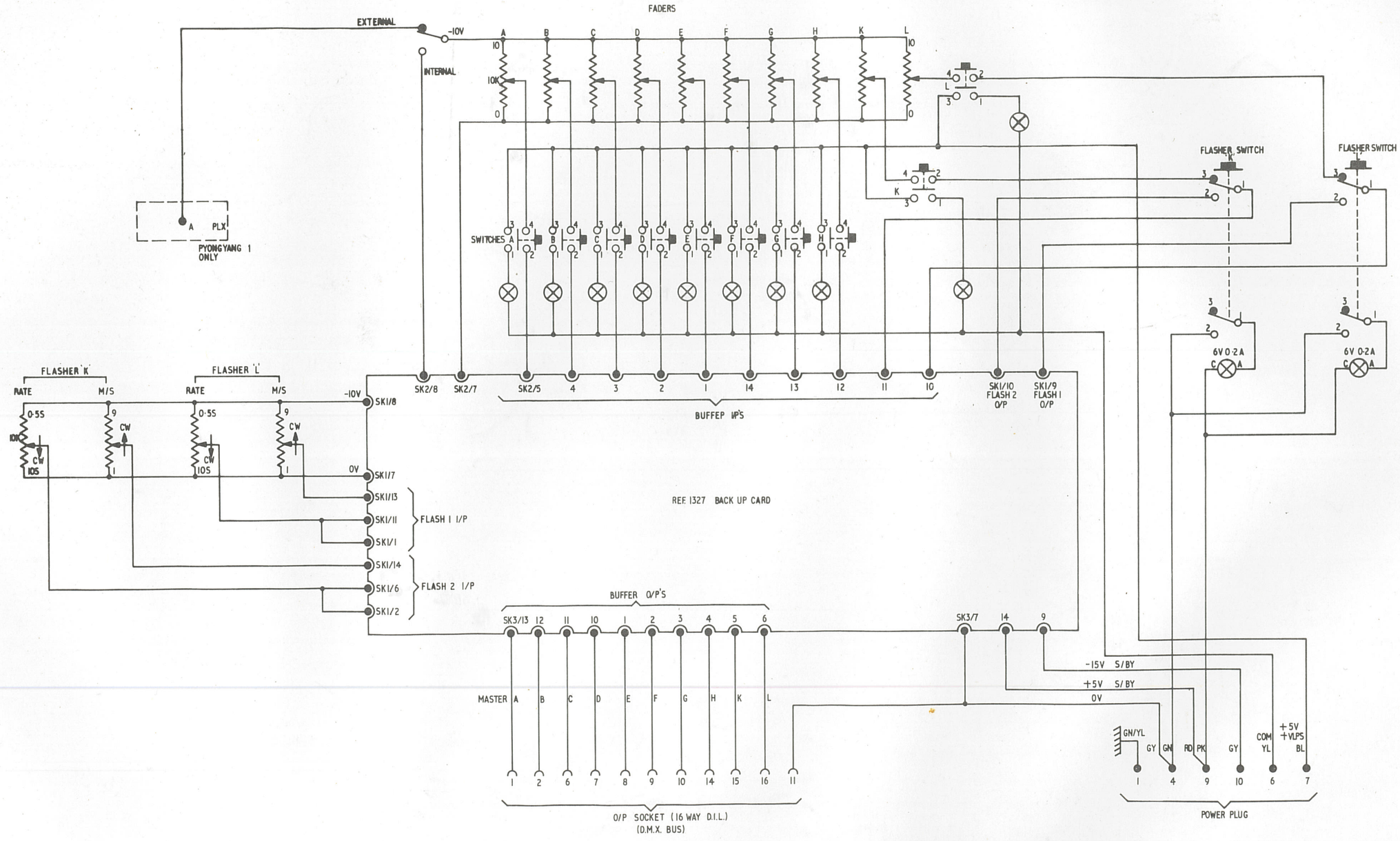

FIG N5

REV.1 C.Nº

RANK STRAND ELECTRIC
PO Box 70 Great West Road Brentford Middlesex TW8 9HR
Telephone 01-568 9222 Telex 24408
A DIVISION OF
RANK AUDIO VISUAL LIMITED

DIMENSIONS IN INCHES/MILLIMETRES
THIRD ANGLE PROJECTION

TOLERANCES	
IMPERIAL	METRIC
FRACTION ± 1/64"	1 DEC PLACE ± 0·4 mm
DECIMAL ±·005"	2 DEC PLACE ± 0·1 mm
ANGULAR ± 0·25°	
UNLESS OTHERWISE STATED	
USED ON :-	

		DATE
SCALE		
DRAWN		9-12-74
CHECKED		10-12-74
APPROVED	VHG	11-12-74
MATERIAL :-		
FINISH :-		

TITLE :-
MMS BACK UP MASTER MODULE
2 FLASHER & SWITCHES

ISSUE A | DWG. Nº 7B14764

ISSUE B¢ D

S/BY +5V

S/BY -15V

8P22AB 8P23AB

8P2AB 8P3AB

PIN PATCH BUFFER CARD REF 1324

8

V/PS

O/PS

8P7A 8P12A 8P13A 8P14A 8P15A 8P2IA 8P19A 8P18A 8P17A 8P16A

PIN PATCH UPPER DECK MASTER ROWS

8T6 8T4 8T2 8T8 8T10 8T12 8T14 8T16 8T18 8T20

PIN PATCH LOWER DECK CHANNEL COLUMNS 1-20

PIN PATCH MIDDLE DECK CHANNEL COLUMNS 1-20

MODULE REAR VIEW (TOP)

POWER

10

D3 D2 D1

DIL SKT

8P 7P 6P 5P 4P 3P 2P 1P

25 A B

PILE DIODE PIN (YELLOW)

INHIBIT DIODE PIN (RED)

MASTERS A B C

CHANNEL

HOLE

TOP DECK

MIDDLE DECK

LOWER DECK

L

16 WAY D.I.L. SOCKET

DMX BUS

1P13A 1P13B 1P12B 1P12A 1P2A 1P2B

DMX

DMX MASTER CARD REF 1326

1

DECK 2

TO PIN PATCH

DECK 1

2P15A 2P16B 2P16A 2P17A 2P19A 2P19B 2P1A

CARD STROBE

CHANNEL DMX CARD 1-20 REF 1325

2

CARD STROBES

CARD ADDRESSES

A/DATA

1P25A 1P25B 1P24A 1P24B 1P23A 1P23B 1P22A 1P22B 1P21A 1P21B 1P3A 1P17A 1P18A 1P18B 1P14A 1P14B 1P15A 1P15B 1P4A 1P4B

3P15A 21-40 3

4P15A 41-60 4

5P15A 61-80 5

6P15A 81-100 6

7P15A 101-120 7

POWER I/P PLUG

CHASSIS

1 2 3 4 5 9 10

+15V TO CARD PINS P9 A,B

+5V TO CARD PINS P5 A,B, P6 A,B } 1-7

0V TO CARD PINS P24 A,B, P25 A,B 1-8

-15V TO CARD PINS P11 A,B 1-7

S/BY +5V TO BUFFER CARD PINS 8P22AB, 8P23AB

S/BY -15V TO BUFFER CARD PINS 8P2AB, 8P3AB

2P25A,B (0V)

4P25A,B (0V)

6P25A,B (0V)

A B C D E F H J K L M N P R S T U V W X Y

2a b c d e f g h m n p r s t u v w x y

CHANNEL 1-20

CHANNEL 21-40

CHANNEL 41-60

CHANNEL 61-80

CHANNEL 81-100

CHANNEL 100-120

DIMMER O/P SOCKET D1

DIMMER O/P SOCKET D2

DIMMER O/P SOCKET D3

FIG PPI

REV.1 CM 15.8.80
Pin Numbers Changes On Ref 1324 Card. 19-10-79 RMC 14-10-74 WHE

REV2. 28.8.80 PIN NUMBERS ON REF 1325 CARD CHANGED 5-9-80 WHE

Card 3 Address 'E' 15.10.80 RMC

RANK STRAND ELECTRIC
PO Box 70 Great West Road Brentford Middlesex TW8 9HR
Telephone 01-568 9222 Telex 24408
A DIVISION OF
RANK AUDIO VISUAL LIMITED

DIMENSIONS IN INCHES/MILLIMETRES
THIRD ANGLE PROJECTION

TOLERANCES	IMPERIAL	METRIC
FRACTION	± 1/64"	1 DEC PLACE ± 0·4 mm
DECIMAL	± ·005"	2 DEC PLACE ± 0·1 mm
ANGULAR	± 0·25°	

UNLESS OTHERWISE STATED

USED ON:-

		DATE
SCALE	NIL	
DRAWN	RMC	9-5-78
CHECKED	D.M.	14-11-79
APPROVED	WHE	11-11-79
MATERIAL:-		
FINISH:-		

TITLE:-
MMS PIN PATCH MODULE (3 DECK) WIRING DIAGRAM

ISSUE B¢ D

DWG. No. 7A14139

DWG. Nº 6A12534 | ISSUE ~~A~~ B

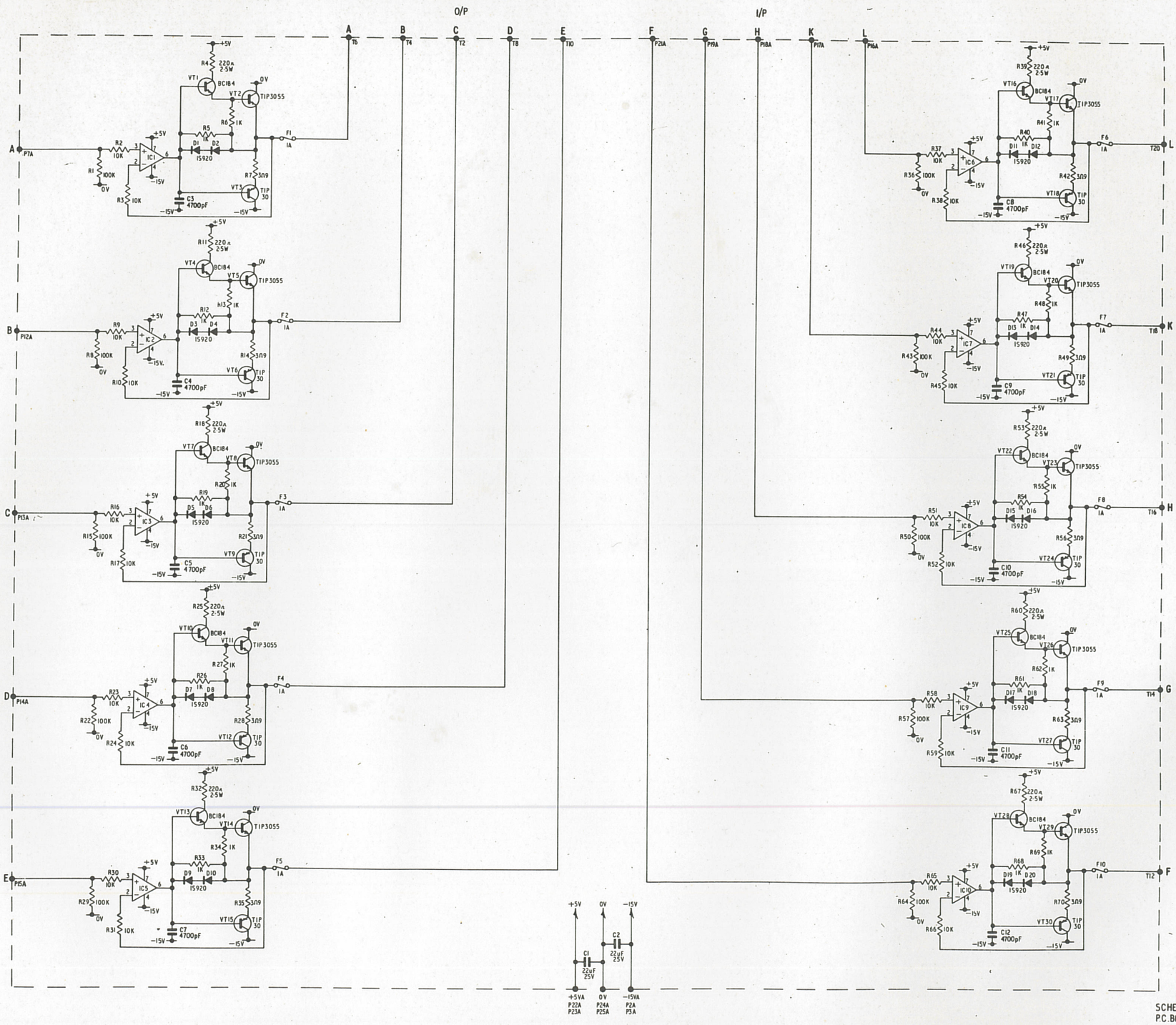

SCHEDULE 5S12535
P.C.BOARD 5A12536

FIG. P2

REV. 1. C.Nº
CHANGE No 6 2284
C3-12 ADDED
DJ 13/6/76
MS 15/7/76

RANK STRAND ELECTRIC
PO Box 70 Great West Road Brentford Middlesex TW8 9HR
Telephone 01-568 9... Telex 24438
A DIVISION OF
RANK AUDIO VISUAL LIMITED

DIMENSIONS IN INCHES/MILLIMETRES
THIRD ANGLE PROJECTION

TOLERANCES		
IMPERIAL	METRIC	
FRACTION ± 1/64"	1 DEC PLACE ± 0.4 mm	
DECIMAL ± .005"	2 DEC PLACE ± 0.1 mm	
ANGULAR ± 0.25°		
UNLESS OTHERWISE STATED		
USED ON :-		

SCALE		DATE
DRAWN	TTC	25-7-73
CHECKED	DRE	11/6/76
APPROVED	DMD	9/6/76
MATERIAL :-		
FINISH :-		

TITLE :-
MMS D/MX PIN PATCH BUFFER

REF 1324 P.C.B. 294/1

ISSUE ~~A~~ B | DWG. Nº 6A12534

DWG. Nº 6B12592	ISSUE AB

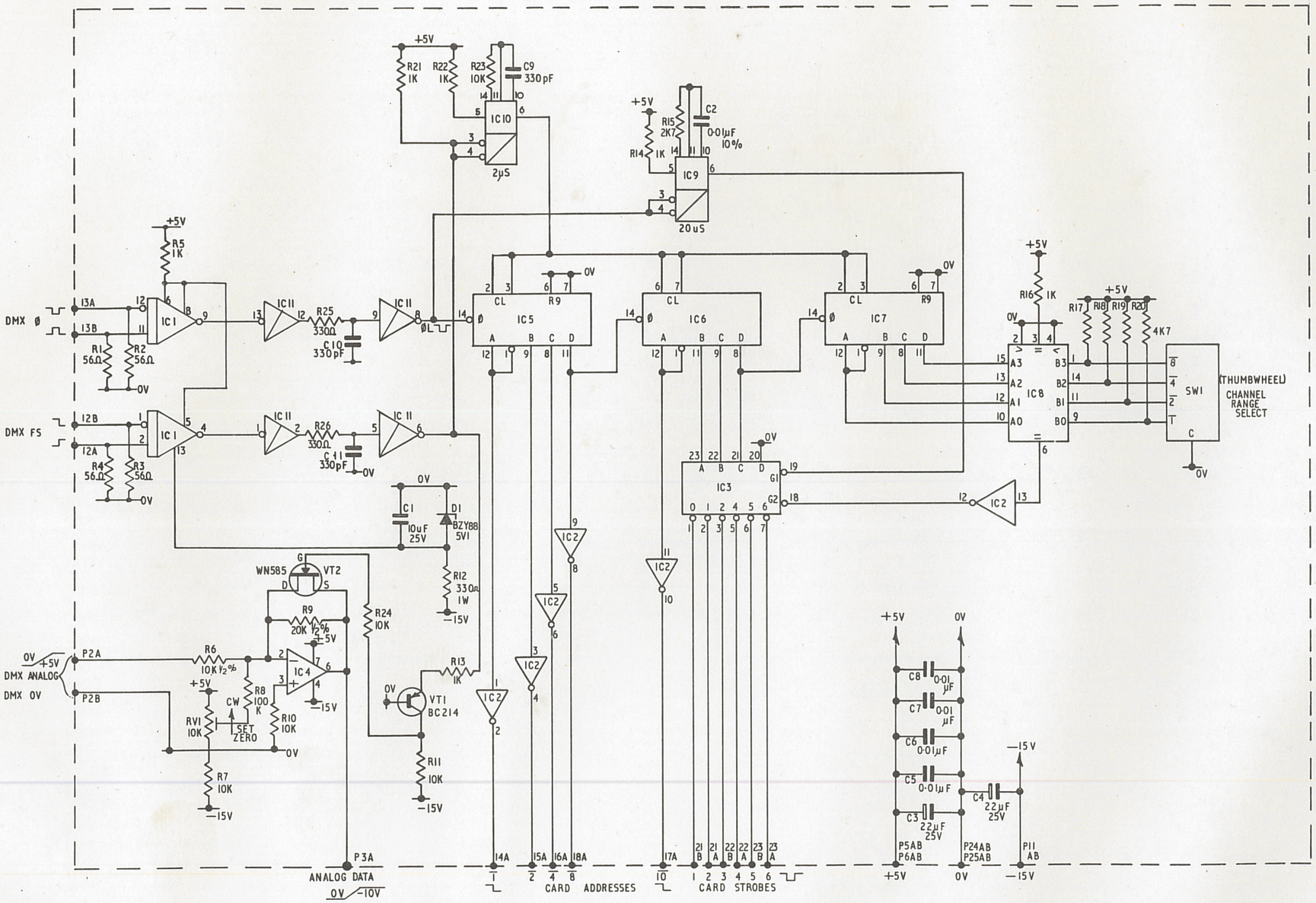

INTEGRATED CIRCUITS			
REF	TYPE	VCC	GND
IC4,	SN72741P	——	——
IC2,	SN7404N	14	7
IC8,	SN7485N	16	8
IC5,7,	SN7490N	5	10
IC6,	SN7492N	5	10
IC9, 10,	SN74121N	14	7
IC3,	SN74154N	24	12
IC1,	SN75107N	14	7
IC 11	SN7414N	14	7

SCHEDULE 5S12593
P.C.BOARD 5A12594

FIG P3

C.Nº
REV. 1

RANK STRAND ELECTRIC
PO Box 70 Great West Road Brentford Middlesex TW8 9HR
Telephone 01-568 9222 Telex 24408
A DIVISION OF
RANK AUDIO VISUAL LIMITED

DIMENSIONS IN INCHES/MILLIMETRES
THIRD ANGLE PROJECTION

TOLERANCES	
IMPERIAL	METRIC
FRACTION ± 1/64"	1 DEC PLACE ± 0·4 mm
DECIMAL ± ·005"	2 DEC PLACE ± 0·1 mm
ANGULAR ± 0·25°	
UNLESS OTHERWISE STATED	
USED ON :-	

		DATE
SCALE		
DRAWN	T.T.C.	19-7-73
CHECKED	D.P.B.	11/6/74
APPROVED	D.A.B.	11/6/74
MATERIAL :-		
FINISH :-		

TITLE :-
MMS D/MX
MASTER CARD
PCB 296/2 REF 1326

ISSUE AB | DWG. Nº 6B12592

DWG. Nº 6A12537 | ISSUE B

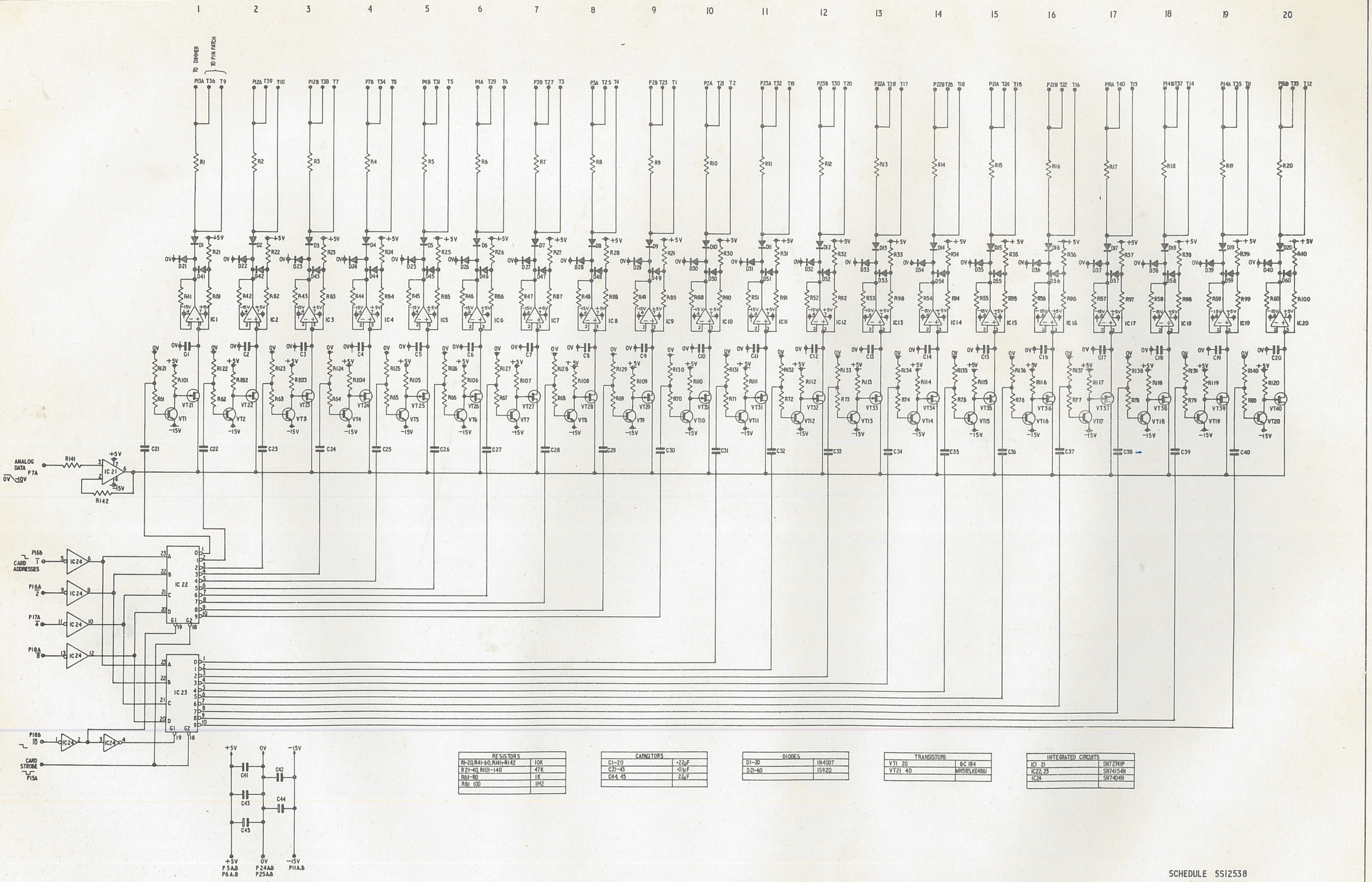

RESISTORS	
R1-20, R41-60, R141-R142	10K
R21-40, R101-140	47K
R61-80	1K
R81 100	1M2

CAPACITORS	
C1-20	+22μF
C21-43	0·1μF
C44, 45	22μF

DIODES	
D1-20	IN4007
D21-60	15920

TRANSISTORS	
VT1 20	BC 184
VT21 40	MN585, KE4861

INTEGRATED CIRCUITS	
IC1 21	SN7234IP
IC22, 23	SN74154N
IC24	SN7404N

SCHEDULE 5S12538
P.C. BOARD 5A12597

FIG. PP4

REV. | C.N.E. | DATE
1 | FROM INTERACTIVE PATCH INHIBIT | 17/6/76
A | R141 ADDED. | 4/8/76
B | C41-C45 ADDED. | 20-7-76

RANK STRAND ELECTRIC
PO Box 70 Great West Road Brentford Middlesex TW8 9HR
Telephone 01-568 9222 Telex 24408
A DIVISION OF
RANK AUDIO VISUAL LIMITED

DIMENSIONS IN INCHES/MILLIMETRES
THIRD ANGLE PROJECTION

TOLERANCES
IMPERIAL | METRIC
FRACTION ± 1/64" | 1 DEC PLACE ± 0·4 mm
DECIMAL ± ·005" | 2 DEC PLACE ± 0·1 mm
ANGULAR ± 0·25°
UNLESS OTHERWISE STATED
USED ON :-

SCALE | DATE
DRAWN J. PENFOLD 17-6-76
CHECKED 23/6/76
APPROVED 23/6/76
MATERIAL :-
FINISH :-

TITLE :- MMS DMX CHANNEL CARD MK.2 CIRCUIT DIAGRAM
PCB 295/1 REF 1325
ISSUE B | DWG. Nº 6A12537

DWG. Nº 7A 15764 | ISSUE BC.

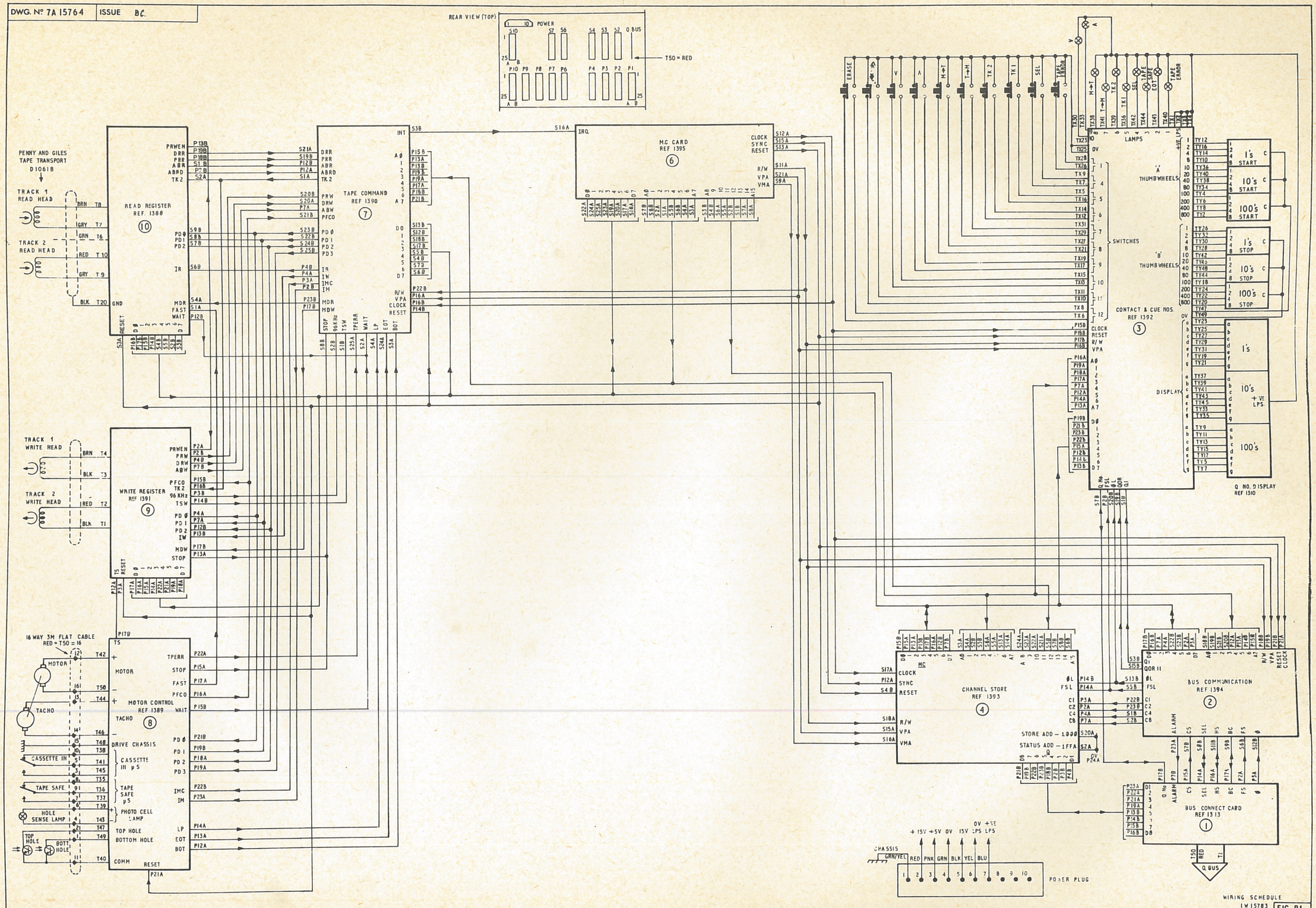

REV.1 C.N° 23886 CARD REF 1395 Pin 6 was 5 10/7/74 AB

REV.2 C.N° 23449 Pinning Area From 1/12 to Thumbwheel 'Start' & 'Stop' 16-8-74 L.Hammond

REV.3 C.N° 23474 Misc Pinnings under M.C. 17/10/74 L.Hammond 17/10/74 D.A.Bell

RANK STRAND ELECTRIC	TOLERANCES		SCALE	DATE
A DIVISION OF RANK AUDIO VISUAL LIMITED	IMPERIAL	METRIC	DRAWN	9-12
	FRACTION ± 1/64	1 DEC PLACE ± 0.4 mm	CHECKED	16-1-75
	DECIMAL ± .005	2 DEC PLACE ± 0.1 mm	APPROVED DPA	16-1-76
DIMENSIONS IN [illegible] ARE	ANGULAR ± 0.25°		MATERIAL -	
THIRD ANGLE PROJECTION	UNLESS OTHERWISE STATED	USED ON -	FINISH -	

TITLE - MMS TAPE MODULE WIRING DIAGRAM

ISSUE BC | DWG. Nº 7A 15764

DWG. Nº 6BI2337	ISSUE A B

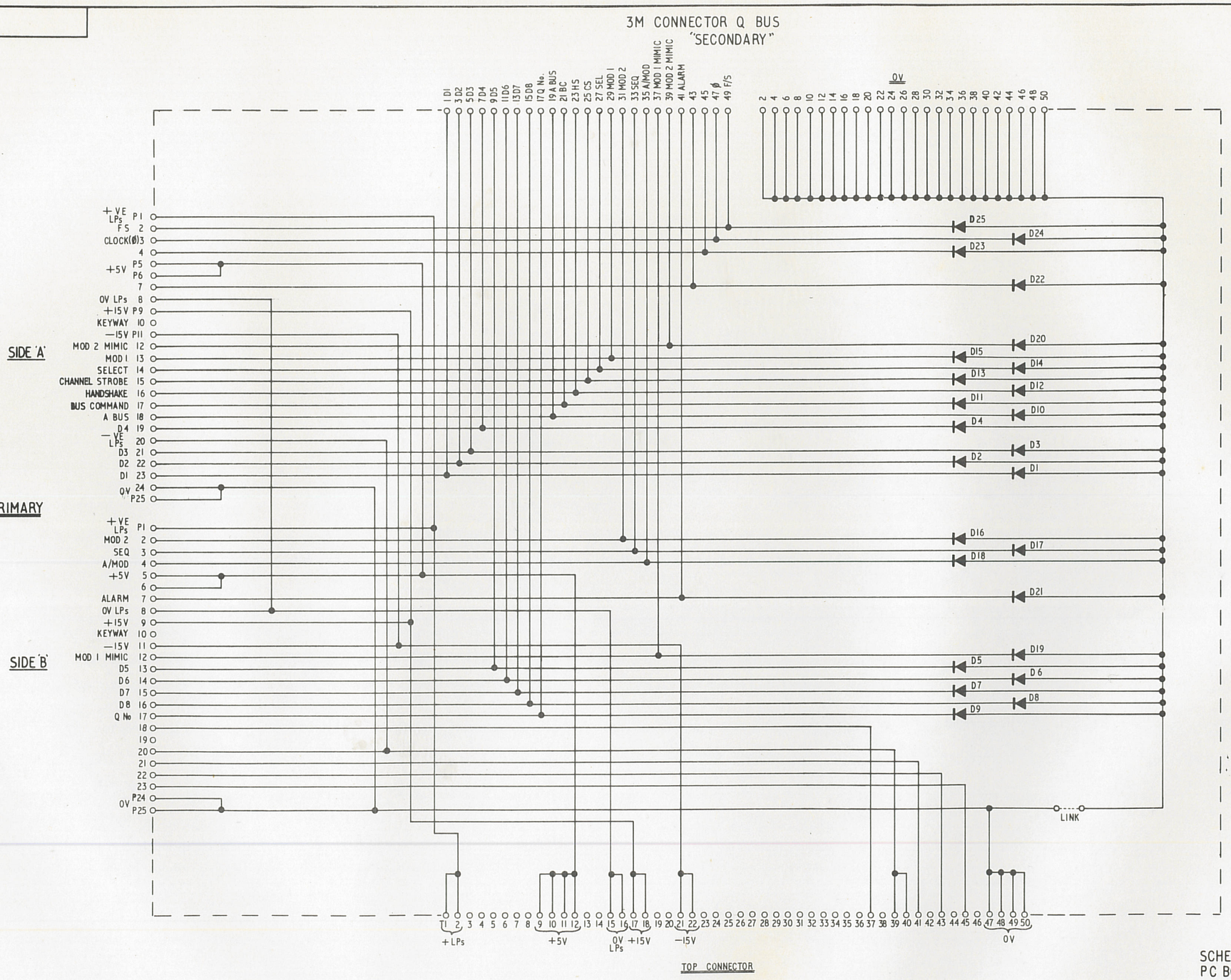

SCHEDULE 5SI2338
PC BOARD 5AI2339

FIG. D, E, F, G, H
J. M. R. S. 2.

REV. 1. C.Nº

RANK STRAND ELECTRIC
PO Box 70 Great West Road Brentford Middlesex TW8 9HH
Telephone 01-568 9222 Telex 24408
A DIVISION OF
RANK AUDIO VISUAL LIMITED

DIMENSIONS IN INCHES/MILLIMETRES
THIRD ANGLE PROJECTION

TOLERANCES	
IMPERIAL	METRIC
FRACTION ± 1/64"	1 DEC PLACE ± 0·4 mm
DECIMAL ± ·005"	2 DEC PLACE ± 0·1 mm
ANGULAR ± 0·25°	
UNLESS OTHERWISE STATED	
USED ON :-	

		DATE
SCALE	——	
DRAWN	T.T.C.	26-7-73
CHECKED	D.H.	4/6/74
APPROVED	D.H.	4/6/74
MATERIAL :-		
FINISH :-		

TITLE :-
MMS MODULE BUS CONNECT CARD
CIRCUIT DIAGRAM
REF 1313 PCB 277/3

ISSUE A B | DWG. Nº 6BI2337

CWS 8.8.

DWG. Nº 6C12334 | ISSUE ~~A~~ ~~B~~ C

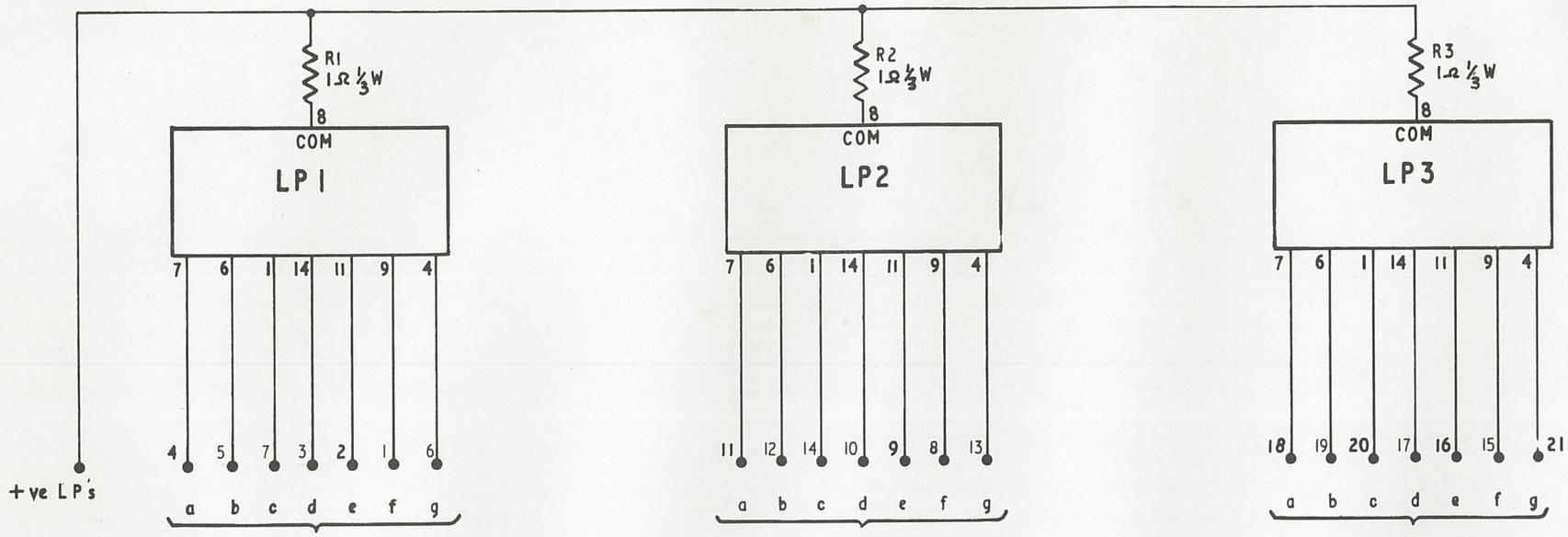

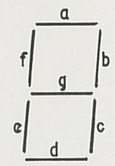

LETTERED SEGMENTS AS FOR SN 7447N.

NOTE:
ALL LP's ARE KGM MS 141

PC BOARD DRG. No. 5C12336
SCHEDULE 5S12335

FIG. D, E, F, G, H, J, M, R, S, 3

REV.1 C.Nº
C.NO E1935.
1 OHM RESISTOR
WAS 1 OHM. ½W.
19.12.74

RANK STRAND ELECTRIC
P.O. Box 70, Great West Road, Brentford, Middlesex. TW8 9HR
Telephone 01-568 [illegible] Telex 24416
A DIVISION OF
RANK AUDIO VISUAL LIMITED

DIMENSIONS IN INCHES/MILLIMETRES
THIRD ANGLE PROJECTION

TOLERANCES	
IMPERIAL	METRIC
FRACTION ± 1/64"	1 DEC PLACE ± 0·4 mm
DECIMAL ± ·005"	2 DEC PLACE ± 0·1 mm
ANGULAR ± 0·25°	
UNLESS OTHERWISE STATED	
USED ON :-	

		DATE
SCALE	—	
DRAWN	G. HAYWARD	13·4·73
CHECKED	[illegible]	14.5.74
APPROVED	[illegible]	14/5/74
MATERIAL :-		
FINISH :-		

TITLE :-
MMS DISPLAY CARD
CIRCUIT DIAGRAM.
PCB 272 REF 1310

ISSUE ~~A~~ ~~B~~ C
DWG. Nº 6C12334

CWG 5.8.

DWG. Nº 6A15583 | ISSUE A B

INTEGRATED CIRCUITS				
REF	TYPE	Vcc	0V	
IC 4,5,7,13,18,20,42,43,46	SN7400N	14	7	
IC 11,16,27,28	SN7404N	14	7	
IC 3	SN7414N	14	-	
IC 48	SN7420N	14	7	
IC 22	SN7430N	14	7	
IC 1,14,49	SN7438N	14	7	
IC 8,23,34,37	SN7442N	16	8	
IC 6,10,12,17,19,21,41,45,47	SN7474N	14	7	
IC 38	SN7485N	16	8	
IC 9,33	SN7493N	5	10	
IC 40	SN74121N	14	7	
IC 35,39	SN74150N	24	12	
IC 25	SN74157	16	8	
IC 31,32,44	SN74194N	16	8	
IC 15,24,29,30,36	N8T26B	16	8	
IC 2	DTL 936	14	7	
IC 26	1702A/PB			

SCHEDULE 5S1558-4
P.C BOARD 5A15585

FIG. R4.

REV.1 C.N° 22330 20-7-76 JRB

RANK STRAND ELECTRIC
A DIVISION OF
RANK AUDIO VISUAL LIMITED

DIMENSIONS IN INCHES/MILLIMETRES
THIRD ANGLE PROJECTION

TOLERANCES	
IMPERIAL	METRIC
FRACTION ± 1/64	1 DEC PLACE ± 0.4 mm
DECIMAL ± .005	2 DEC PLACE ± 0.1 mm
ANGULAR ± 0.25°	
UNLESS OTHERWISE STATED	
USED ON :-	

		DATE
SCALE	- -	
DRAWN	T.T.C	2-9-76
CHECKED		16-7-76
APPROVED	D.T.M.S	16-7-76
MATERIAL :-		
FINISH :-		

TITLE :-
MMS MC/Q
BUS COMMUNICATION CARD
CIRCUIT DIAGRAM
PCB. 445/2 REF 1394
ISSUE A B | DWG. Nº 6A15583

DWG. Nº 6A15688 | ISSUE B

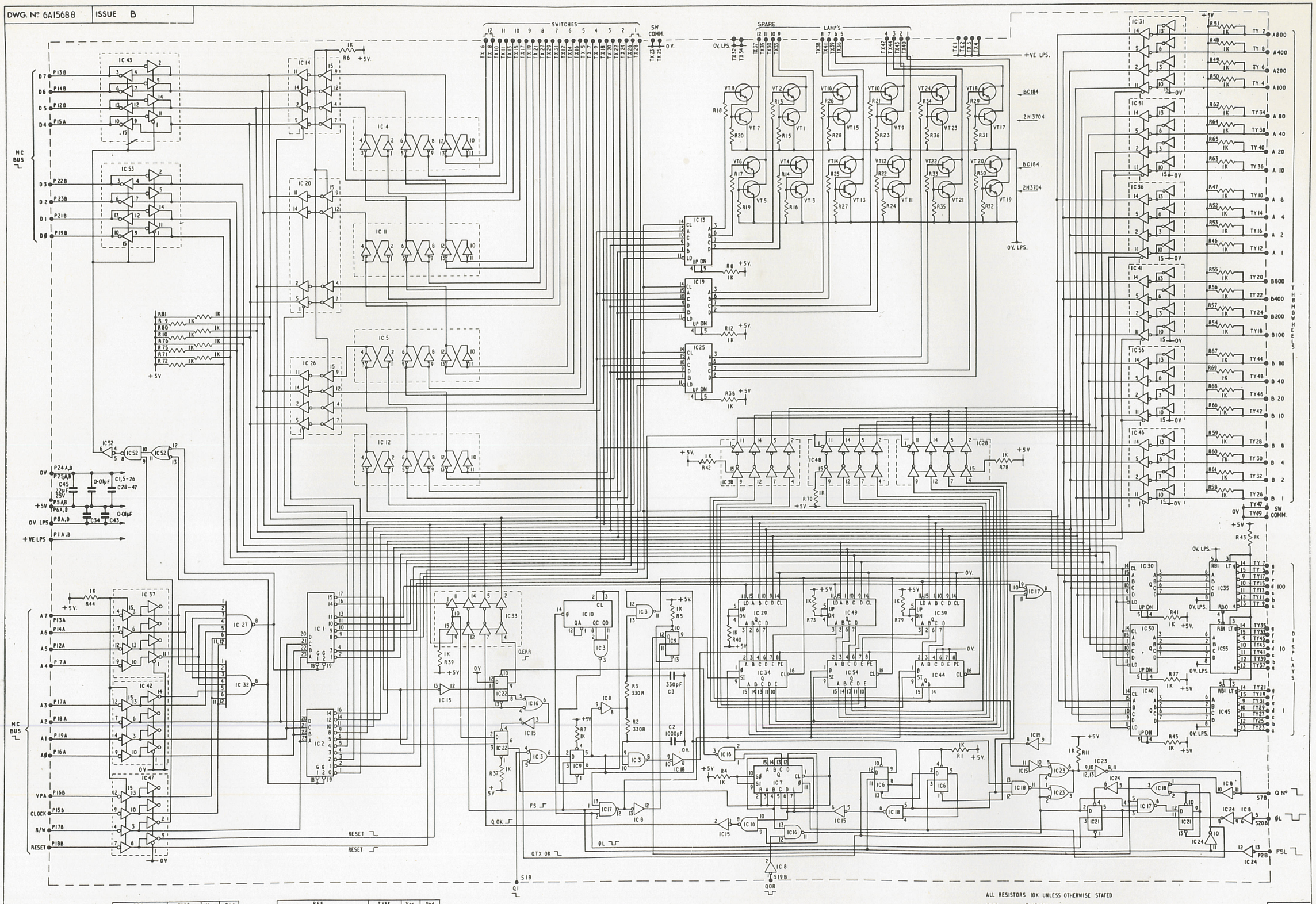

ALL RESISTORS 10K UNLESS OTHERWISE STATED

PCB —— 5A15690
SCHEDULE —— 5S15689

FIG. R5.

REF	TYPE	Vcc	Gnd
IC 3, 16, 52	SN7400N	14	7
IC 17	SN7410N	14	7
IC 27, 32	SN7430N	14	7
IC 6, 9, 21, 22	SN7474 N	14	7
IC 35, 45, 55	SN7447N	16	8 0V. LPS.
IC 34, 44, 54	SN7496N	5	12
IC 18	SN7437N	14	7
IC 23	SN7438N	14	7

REF	TYPE	Vcc	Gnd
IC 13, 19, 25, 29, 30, 39, 40. 49. 50	SN74193N	16	8
IC 7	SN74194N	16	8
IC 4, 5, 8, 11, 12	DTL 936	14	7
IC 15, 24	SN 7404N	14	7
IC 14, 20, 26, 28, 31, 33, 36, 37, 38, 41, 42, 43, 46, 47, 48, 51, 53, 56	NBT 26B	16	8
IC 1, 2,	SN74154N	24	12
IC 10	SN7493N	5	10

REV. 1 C.Nº

RANK STRAND ELECTRIC
PO Box 70 Great West Road Brentford Middlesex TW8 9HR
Telephone 01-568 9222 Telex 24408
A DIVISION OF
RANK AUDIO VISUAL LIMITED

DIMENSIONS IN INCHES/MILLIMETRES
THIRD ANGLE PROJECTION

TOLERANCES		
IMPERIAL	METRIC	
FRACTION ± 1/64"	1 DEC PLACE ± 0.4 mm	
DECIMAL ± .005"	2 DEC PLACE ± 0.1 mm	
ANGULAR ± 0.25°		
UNLESS OTHERWISE STATED		
USED ON :-		

SCALE		DATE
DRAWN	R Hartles	7-7-75
CHECKED	[illegible]	16-1-76
APPROVED	[illegible]	16-1-76
MATERIAL :-		
FINISH :-		

TITLE :-
MMS MC
CONTACT & CUE No's CARD.

PCB 443/1 REF 1392

ISSUE B | DWG. Nº 6A15688

DWG. Nº 6A15691 | ISSUE C

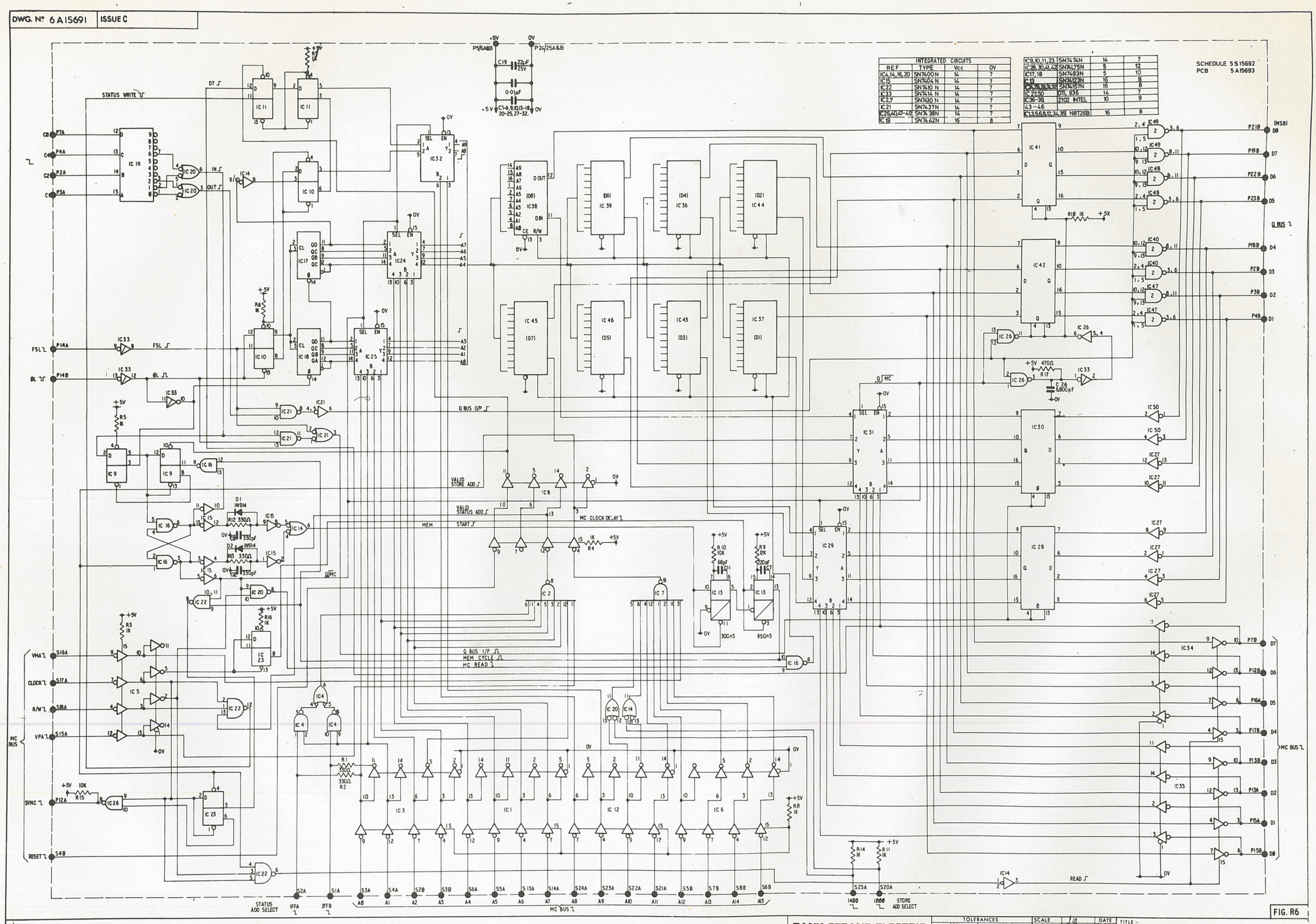

INTEGRATED CIRCUITS			
REF	TYPE	Vcc	0V
IC4,14,16,20	SN7400N	14	7
IC15	SN7404N	14	7
IC22	SN7410N	14	7
IC33	SN7414N	14	7
IC2,7	SN7430N	14	7
IC21	SN7437N	14	7
IC26,40,47-49	SN7438N	14	7
IC19	SN7442N	16	8
IC9,10,11,23	SN7474N	14	7
IC28,30,41,42	SN74L75N	5	12
IC17,18	SN7493N	5	10
IC13	SN74123N	16	8
IC24,25,29,31,32	SN74157N	16	8
IC27,50	DTL 936	14	7
IC36-39	2102 INTEL	10	9
43-46			
IC1,3,5,6,8,12,34,35	N8T26B	16	8

FIG. R6

RANK STRAND ELECTRIC
PO Box 70 Great West Road Brentford Middlesex TW8 9HR
Telephone 01-568 9222 Telex 24408
A DIVISION OF
RANK AUDIO VISUAL LIMITED

DIMENSIONS IN INCHES/MILLIMETRES
THIRD ANGLE PROJECTION

TOLERANCES		
IMPERIAL	METRIC	
FRACTION ± 1/64"	1 DEC PLACE ± 0.4mm	
DECIMAL ± .005"	2 DEC PLACE ± 0.1mm	
ANGULAR ± 0.25°		
UNLESS OTHERWISE STATED		
USED ON:-		

SCALE		DATE
DRAWN	[illegible]	9.775
CHECKED	[illegible]	16.1.76
APPROVED	DRB	16.1.76
MATERIAL:-		
FINISH:-		

TITLE:-
MMS MC/Q
CHANNEL STORE CARD

PCB 444/2 REF 1393

ISSUE C | DWG. Nº 6A15691

REV. 1 C.Nº

DWG. Nº 6A15697 | ISSUE D

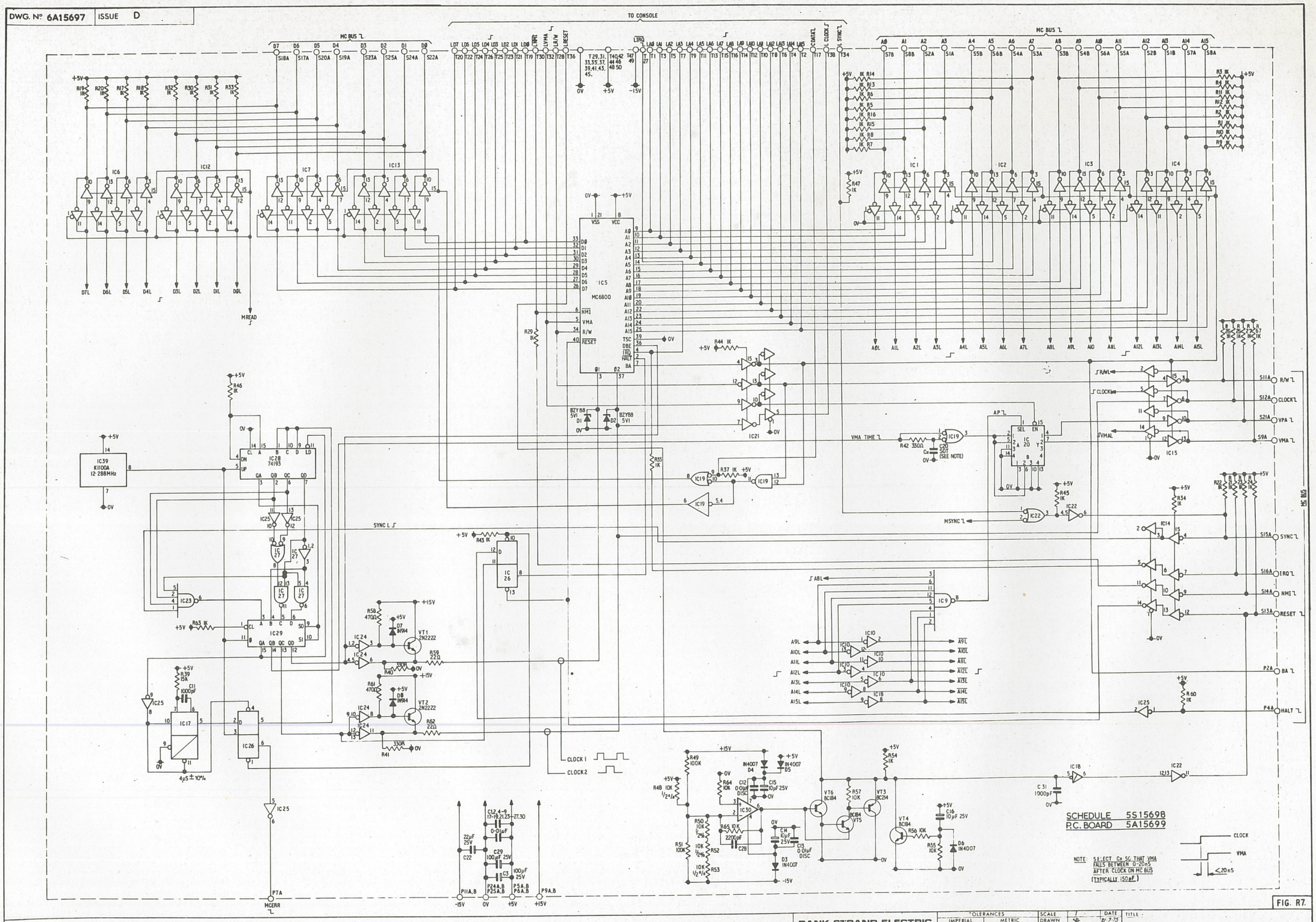

FIG. R7.

RANK STRAND ELECTRIC A DIVISION OF RANK AUDIO VISUAL LIMITED DIMENSIONS IN INCHES/MILLIMETRES THIRD ANGLE PROJECTION	TOLERANCES IMPERIAL / METRIC FRACTION ± 1/64" / 1 DEC PLACE ± 0.4mm DECIMAL ± .005" / 2 DEC PLACE ± 0.1mm ANGULAR ± 0.25° UNLESS OTHERWISE STATED USED ON -	SCALE 1 / DATE DRAWN / 21-7-75 CHECKED / 16-1-76 APPROVED / 16-1-76 MATERIAL - FINISH -	TITLE - MMS MC CARD (PROCESSOR) PCB446/1 REF.1395 SHEET 1 OF 2 ISSUE D DWG. Nº 6A15697	

DWG. Nº 6A15697 | ISSUE D

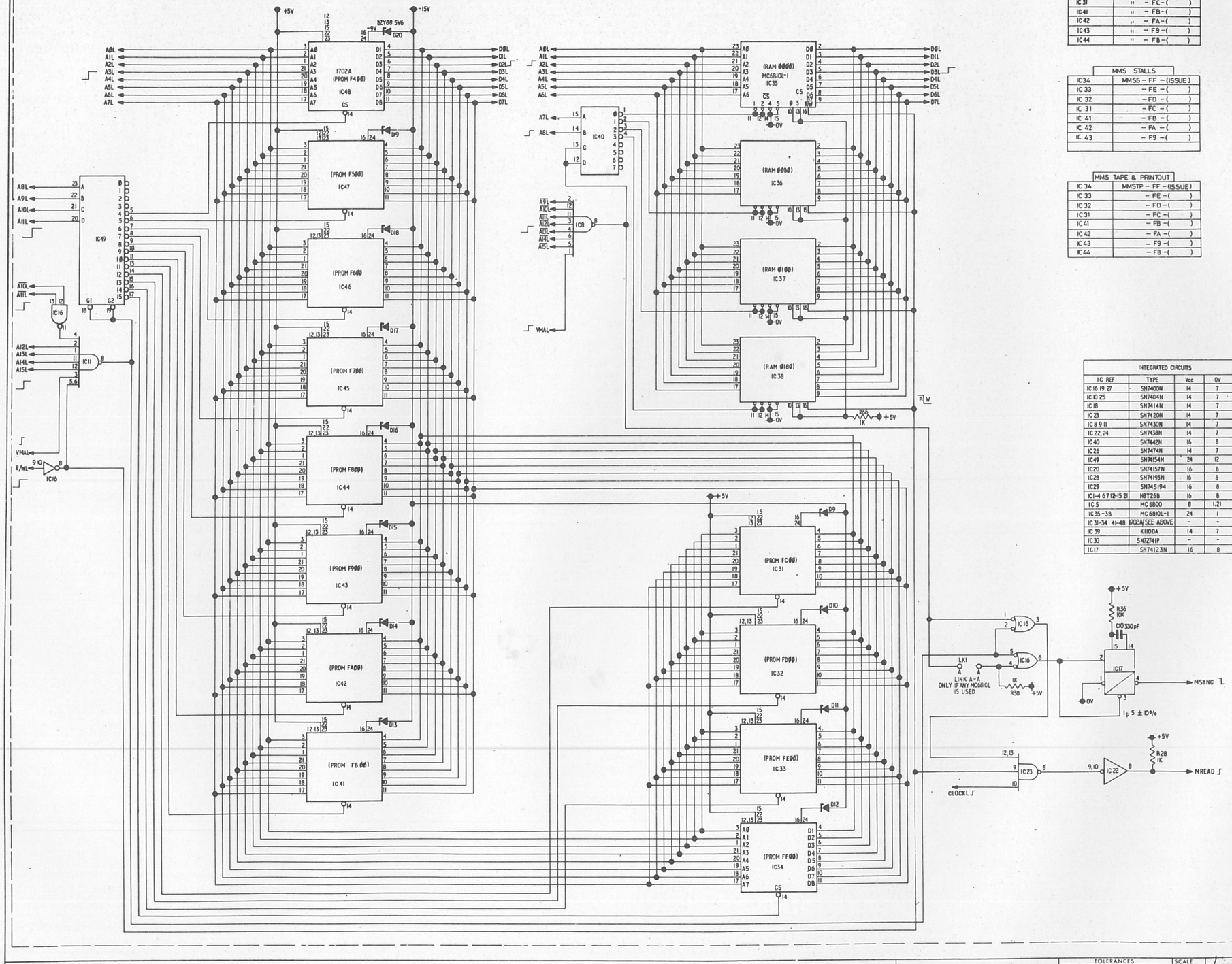

1702A PROGRAMS

MMS TAPE	
IC 34	MMST – FF –(ISSUE)
IC 33	" – FE –( )
IC 32	" – FD –( )
IC 31	" – FC –( )
IC 41	" – FB –( )
IC 42	" – FA –( )
IC 43	" – F9 –( )
IC 44	" – F8 –( )

MMS STALLS	
IC 34	MMSS – FF – (ISSUE)
IC 33	– FE –( )
IC 32	– FD –( )
IC 31	– FC –( )
IC 41	– FB –( )
IC 42	– FA –( )
IC 43	– F9 –( )

MMS TAPE & PRINTOUT	
IC 34	MMSTP – FF –(ISSUE)
IC 33	– FE –( )
IC 32	– FD –( )
IC 31	– FC –( )
IC 41	– FB –( )
IC 42	– FA –( )
IC 43	– F9 –( )
IC 44	– F8 –( )

INTEGRATED CIRCUITS			
IC REF	TYPE	Vcc	0V
IC 16 19 27	SN7400N	14	7
IC 10 25	SN7404N	14	7
IC 18	SN7414N	14	7
IC 23	SN7420N	14	7
IC 8 9 11	SN7430N	14	7
IC 22, 24	SN7438N	14	7
IC 40	SN7442N	16	8
IC 26	SN7474N	14	7
IC 49	SN74154N	24	12
IC 20	SN74157N	16	8
IC 28	SN74193N	16	8
IC 29	SN74S194	16	8
IC1-4 6 7 12-15 21	N8T26B	16	8
IC 5	MC 6800	8	1,21
IC 35-38	MC 6810L-1	24	1
IC 31-34 41-48	1702A/SEE ABOVE	–	–
IC 39	K1100A	14	7
IC 30	SN72741P	–	–
IC 17	SN74123N	16	8

SCHEDULE 5S15698
PC BOARD 5A15699

FIG. R8

REV. 1. C.Nº

RANK STRAND ELECTRIC
A DIVISION OF
RANK AUDIO VISUAL LIMITED

DIMENSIONS IN INCHES/MILLIMETRES
THIRD ANGLE PROJECTION

TOLERANCES
IMPERIAL | METRIC
FRACTION ± 1/64 | 1 DEC PLACE ± 0.4 mm
DECIMAL ± .005 | 2 DEC PLACE ± 0.1 mm
ANGULAR ± 0.25
UNLESS OTHERWISE STATED
USED ON:-

SCALE | DATE
DRAWN | 15.7.75
CHECKED | 16.1.76
APPROVED | 16.1.76
MATERIAL:-
FINISH:-

TITLE:-
MMS
MC CARD (MEMORY)
PCB 446/1 REF 1395 SHEET 2 OF 2
ISSUE D DWG. Nº 6A15697

DWG. Nº 6A14828 | ISSUE B

INTEGRATED CIRCUITS			
IC. REF.	TYPE	Vcc	GND
IC6,12,19,25,26,32 35,36.	SN7400N	14	7
IC11, 21, 23	SN7404N	14	7
IC14, 18	SN7410N	14	7
IC7, 40	SN7420N	14	7
IC31, 41	SN7430N	14	7
IC5, 20	SN7438N	14	7
IC10, 17, 39	SN7442N	16	8
IC 3, 4, 13, 33, 34	SN7474N	14	7
IC27, 28, 29	SN7493N	5	10
IC 42, 43	SN74123N	16	8
IC24	SN74154N	24	12
IC2, 9, 22	SN74193N	16	8
IC1, 8, 16, 30, 37, 38	N8T26B	16	8
IC15	1702A/MTC		

FIG. R10

RANK STRAND ELECTRIC
A DIVISION OF
RANK AUDIO VISUAL LIMITED
DIMENSIONS IN INCHES/MILLIMETRES
THIRD ANGLE PROJECTION

TOLERANCES		SCALE		DATE
IMPERIAL	METRIC	DRAWN	D.L.G	20-6-75
FRACTION ± 1/64"	1 DEC PLACE ± 0.4mm	CHECKED		4/1/76
DECIMAL ± .005	2 DEC PLACE ± 0.1mm	APPROVED		16/1/76
ANGULAR ± 0°25'		MATERIAL :-		
UNLESS OTHERWISE STATED		FINISH :-		
USED ON :-				

TITLE :- MMS TAPE. TAPE COMMAND CARD CIRCUIT DIAGRAM REF 1390

PCB 441/1 | ISSUE B | DWG. Nº 6A14828

DWG. Nº 6A15587 | ISSUE C

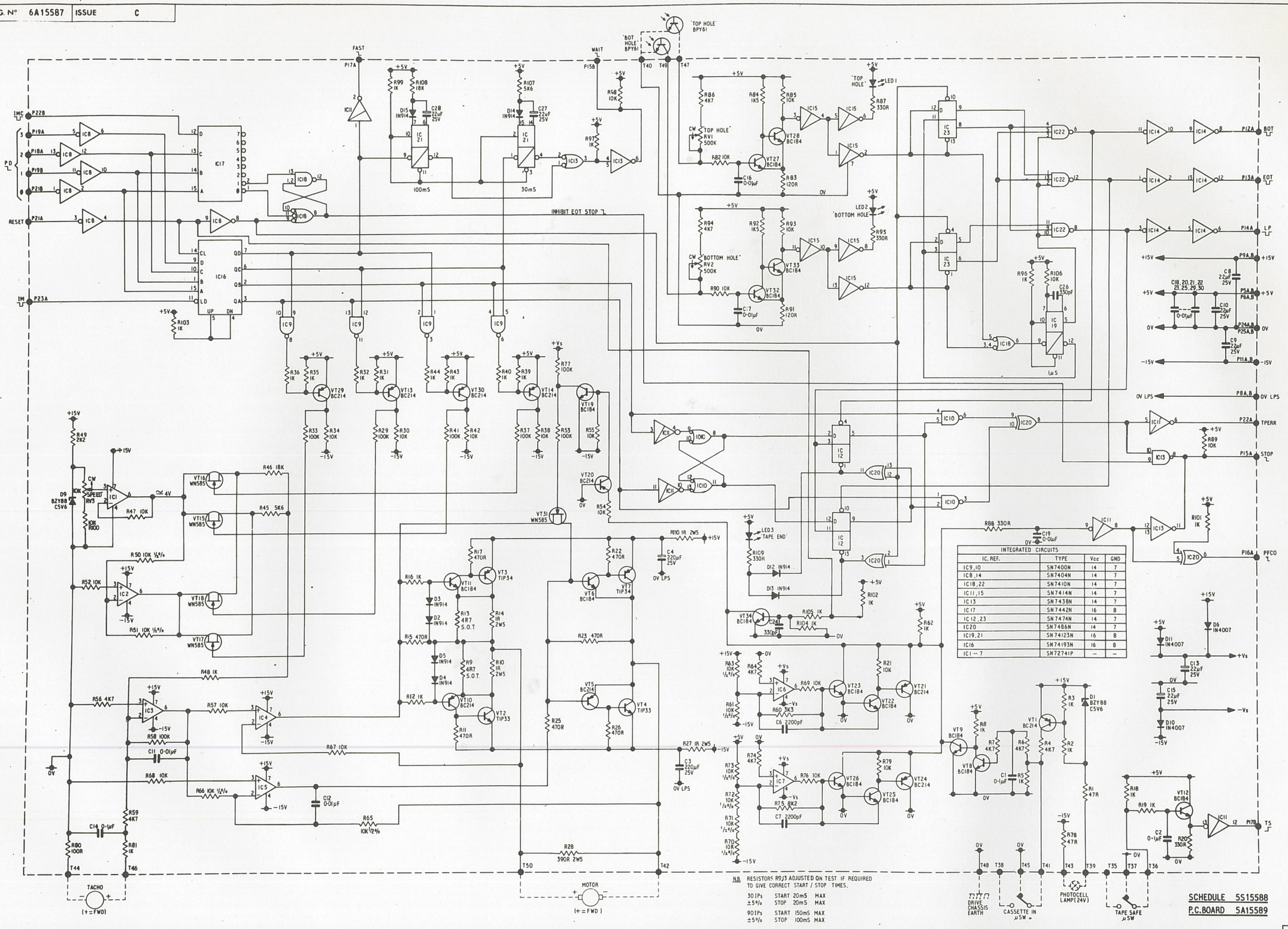

NB. RESISTORS R9J3 ADJUSTED ON TEST IF REQUIRED TO GIVE CORRECT START / STOP TIMES.

30 IPS ±5%	START	20mS	MAX
	STOP	20mS	MAX
90 IPS ±5%	START	150mS	MAX
	STOP	100mS	MAX

SCHEDULE 5S15588
P.C.BOARD 5A15589

FIG R11

REV.1 C.N.º

RANK STRAND ELECTRIC
P.O. Box 70, Great West Road, Brentford, Middlesex, TW8 9HR
Telephone 01-568 9222 Telex 24618
A DIVISION OF
RANK AUDIO VISUAL LIMITED

DIMENSIONS IN INCHES/MILLIMETRES
THIRD ANGLE PROJECTION

TOLERANCES		SCALE		DATE
IMPERIAL	METRIC	DRAWN	C. COOPER	26-6-75
FRACTION ± 1/64"	1 DEC PLACE ± 0·4 mm	CHECKED		16-1-76
DECIMAL ± 005"	2 DEC PLACE ± 0·1 mm	APPROVED	DAG	16-1-76
ANGULAR ± 0·25°		MATERIAL :-		
UNLESS OTHERWISE STATED		FINISH :-		
USED ON :-				

TITLE :-
MMS TAPE MODULE MOTOR CONTROL CARD
CIRCUIT DIAGRAM
PCB 440/2 REF 1389
ISSUE C DWG. Nº 6A15587

DWG. N°6A15580 | ISSUE B

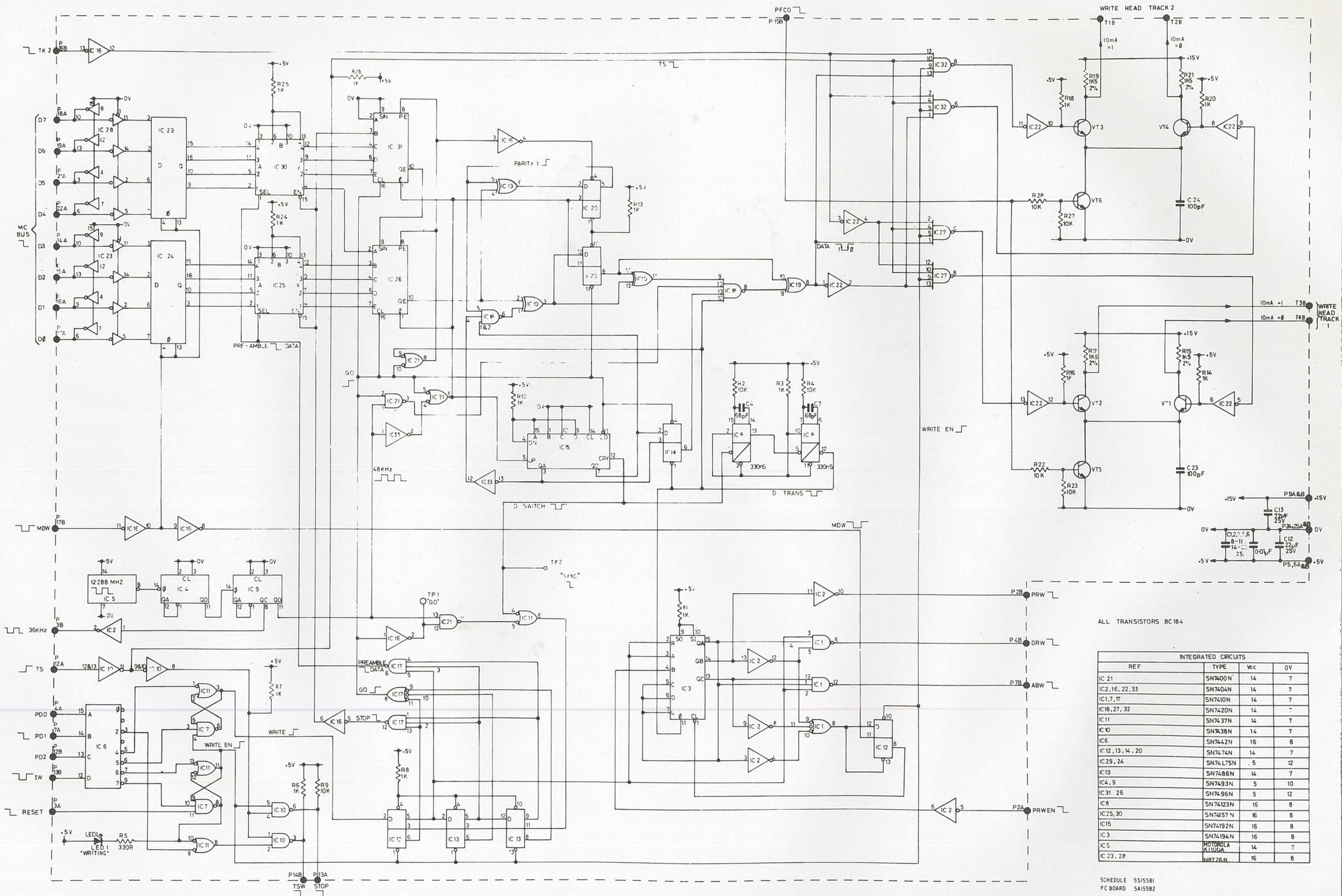

ALL TRANSISTORS BC184

INTEGRATED CIRCUITS			
REF	TYPE	Vcc	0V
IC 21	SN7400N	14	7
IC2,16, 22, 33	SN7404N	14	7
IC1,7,17	SN7410N	14	7
IC18, 27, 32	SN7420N	14	7
IC 11	SN7437N	14	7
IC 10	SN7438N	14	7
IC6	SN7442N	16	8
IC12, 13, 14, 20	SN7474N	14	7
IC29, 24	SN74L75N	5	12
IC19	SN7486N	14	7
IC4, 9	SN7493N	5	10
IC31 26	SN7496N	5	12
IC8	SN74123N	16	8
IC25, 30	SN7457N	16	8
IC15	SN74192N	16	8
IC3	SN74194N	16	8
IC5	MOTOROLA K11GUA	14	7
IC 23, 28	NBT26B	16	8

SCHEDULE 5S15581
PC BOARD 5A15582

FIG. R12

REV. | C.N°

RANK STRAND ELECTRIC
RANK AUDIO VISUAL LIMITED

DIMENSIONS IN INCHES MILLIMETRES
THIRD ANGLE PROJECTION

TOLERANCES
IMPERIAL METRIC
FRACTION DEC PLACE
DECIMAL DEC PLACE
ANGLE
UNLESS OTHERWISE STATED

SCALE
DRAWN J. KENNY DATE 19-7-75
CHECKED
APPROVED
MATERIAL
FINISH

MMS TAPE MODULE
WRITE REGISTER CARD
CIRCUIT DIAGRAM

PCB 442/1 REF 1391
ISSUE B DWG. N° 6A15580

DWG. Nº 6A15573 | ISSUE C

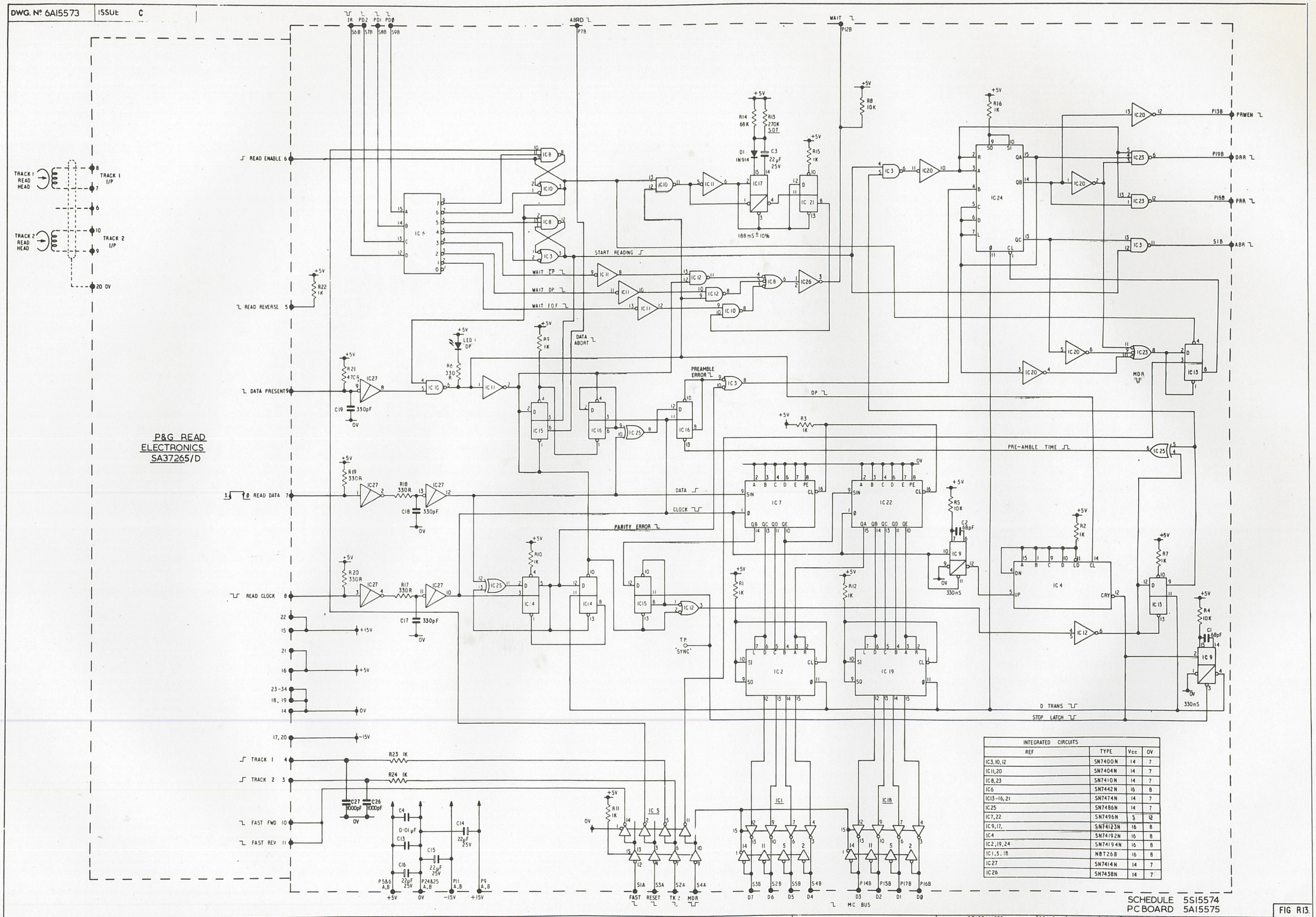

INTEGRATED CIRCUITS			
REF	TYPE	Vcc	0V
IC3,10,12	SN7400N	14	7
IC11,20	SN7404N	14	7
IC8,23	SN7410N	14	7
IC6	SN7442N	16	8
IC13-16,21	SN7474N	14	7
IC25	SN7486N	14	7
IC7,22	SN7496N	5	12
IC9,17,	SN74123N	16	8
IC4	SN74192N	16	8
IC2,19,24	SN74194N	16	8
IC1,5,18	N8T26B	16	8
IC27	SN7414N	14	7
IC26	SN7438N	14	7

SCHEDULE 5S15574
PCBOARD 5A15575

FIG R13.

REV 1. C.Nº

RANK STRAND ELECTRIC
A DIVISION OF
RANK AUDIO VISUAL LIMITED

DIMENSIONS IN INCHES/MILLIMETRES
THIRD ANGLE PROJECTION

TOLERANCES
IMPERIAL | METRIC
FRACTION ± 1/64 | 1 DEC PLACE ± 0.4mm
DECIMAL ± .005 | 2 DEC PLACE ± 0.1mm
ANGULAR ± 0.25°
UNLESS OTHERWISE STATED
USED ON:

SCALE | DATE
DRAWN T.T.C. 20.6.76
CHECKED 16.1.76
APPROVED D.R.G. 16.1.76
MATERIAL:
FINISH:

TITLE:
MMS TAPE MODULE READ REGISTER CARD

PCB 439/2 REF 1388

ISSUE C DWG. Nº 6A15573

DWG. Nº 6A16703	ISSUE A

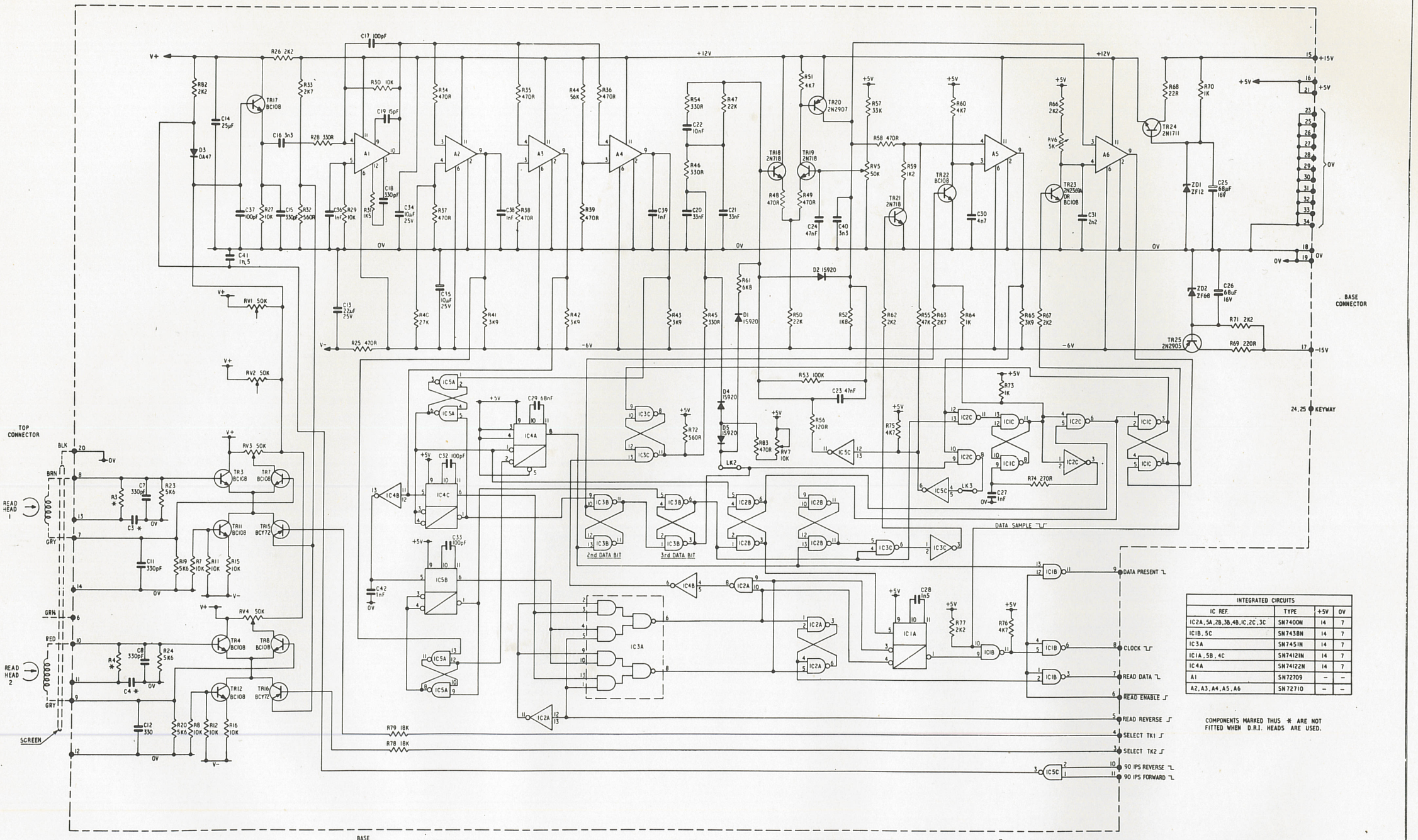

INTEGRATED CIRCUITS			
IC REF.	TYPE	+5V	0V
IC2A, 5A, 2B, 3B, 4B, IC, 2C, 3C	SN7400N	14	7
IC1B, 5C	SN7438N	14	7
IC3A	SN7451N	14	7
IC1A, 5B, 4C	SN74121N	14	7
IC4A	SN74122N	14	7
A1	SN72709	–	–
A2, A3, A4, A5, A6	SN72710	–	–

COMPONENTS MARKED THUS * ARE NOT FITTED WHEN D.R.I. HEADS ARE USED.

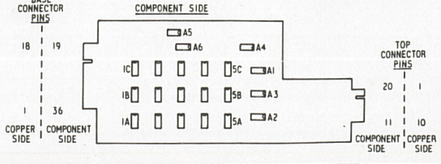

RV3 – SET IV p-p ON A1/10 FOR 3200 f.c.p.i. SIGNAL ON TRACK 1
RV4 – SET IV p-p ON A1/10 FOR 3200 f.c.p.i. SIGNAL ON TRACK 2.
RV5 – CLOCK PHASE.
RV6 – IC1C/6 PERIOD TO 50% OF DATA BIT PERIOD.

DO NOT ADJUST UNLESS FAULT CERTAIN

FIG R14

RANK STRAND ELECTRIC A DIVISION OF RANK AUDIO VISUAL LIMITED	TOLERANCES IMPERIAL / METRIC FRACTION ± 1/64" / 1 DEC PLACE ± 0.4mm DECIMAL ± .005 / 2 DEC PLACE ± 0.1mm ANGULAR ± 0.25 UNLESS OTHERWISE STATED	SCALE		DATE	TITLE:- PENNY & GILES 2 TRACK READ ELECTRONICS TYPE B (0101 PREAMBLE) CIRCUIT DIAGRAM P&G DRWG DR-C/W37265/D, USED ON D10618
		DRAWN	C.COOPER	6-1-76	
		CHECKED		16-1-76	
		APPROVED	B.P.G.	16-1-76	
DIMENSIONS IN INCHES/MILLIMETRES THIRD ANGLE PROJECTION	USED ON:- MMS TAPE MODULE	MATERIAL:-			ISSUE A / DWG. Nº 6A16703
		FINISH:-			

REV. 1 C.N°

DWG. N° IM16641 ISSUE A

ADDRESS	R/W	TAG	D7	D6	D5	D4	D3	D2	D1	DØ	DESCRIPTION
IFFF											N/U
IFFE											N/U
IFFD	R/W	THASCR	NS	SCC / INT EN	Ø / WE	Ø / RE	SC3	SC2	SC1	SCØ	SLAVE COMMAND REGISTER(SCØ-SC3 AS PER Q BUS) REF 1394
IFFC	R/W	THAMCR	MCERR	MCC / INT EN	Ø	Ø	Ø / MC3	Ø / MC2	Ø / MC1	Ø / MCØ	MASTER COMMAND REGISTER(SCØ-SC3 AS PER Q BUS) REF 1394
IFFB											N/U
IFFA	R/W	THACSS	Ø UPPER PAGE	Ø	Ø	Ø	Ø	Ø	Ø	Ø	MC~Q BUS CHANNEL STORE STATUS REGISTER REF 1393
IFF9											N/U
IFF8											N/U
IFF7											N/U
IFF6											N/U
IFF5											N/U
IFF4											N/U
IFF3	R/W	THATDW	Ø ← WRITE DATA →								TAPE WRITE DATA REGISTER (REF 1391)
IFF2	R/W	THATDR	← READ DATA →								TAPE READ DATA REGISTER (REF 1388)
IFF1	R/W	THATC	Ø / INT EN	Ø	Ø	Ø	Ø ← COMMAND CODE →				TAPE COMMAND REGISTER
IFFØ	R/W	THATS	DR	PR	PO	NB	LP	A	TS	Ø	TAPE STATUS REGISTER (WRITE TO CLEAR INT)
IFEF	R/W	THAQBC	QERR	QOK / SET Q No.	1	FS	1	1	1	1	Q BUS QNo. COMMAND AND STATUS REGISTER
IFEE	R/W		1	1	1	1	1	1	1	1	DO NOT USE
IFED	R/W		800	400	200	100	80	40	20	10	Q BUS QNo. HUNDREDS AND TENS
IFEC	R/W	THAQBN	8	4	2	1 UNITS	1	1	1	1	Q BUS QNo. UNITS
IFEB	R/W		1	1	1	1	1	1	1	1	DO NOT USE
IFEA	R/W		1	1	1	1	1	1	1	1	DO NOT USE
IFE9	R/W		1 / 800	1 / 400	1 / 200	1 / 100	1 / 80	1 / 40	1 / 20	1 / 10	QNo. DISPLAY HUNDREDS AND TENS
IFE8	R/W	THAQND	1 / 8	1 / 4	1 / 2	1 / 1 UNITS	1	1	1	1	QNo. DISPLAY UNITS REF 1392
IFE7	R/W		800	400	200	100	80	40	20	10	STOP THUMBWHEELS HUNDREDS AND TENS
IFE6	R/W		8	4	2	1 UNITS	1	1	1	1	STOP THUMBWHEELS UNITS
IFE5	R/W		800	400	200	100	80	40	20	10	START THUMBWHEELS HUNDREDS AND TENS
IFE4	R/W	THASST	8	4	2	1 UNITS	1	1	1	1	START THUMBWHEELS UNITS
IFE3	R/W		1	1	1	1	1	1	1	1	DO NOT USE
IFE2	R/W		ERASE	« » / >	>	< / V	1	1	1	1	CONTACTS MIMICS
IFE1	R/W		M→T	T→M	TRACK 2	TRACK 1	1	1	1	1	CONTACTS MIMICS
IFE0	R	THACM	SEL	?	?	TAPE ERROR	1	1	1	1	CONTACTS
	W		SEL	TAPE SAFE	END OF TAPE	TAPE ERROR					MIMICS

COMMAND CODE Ø = N/U
1 = READ
2 = WRITE
3 = WCFG(WRITE CONT FILE GAP)
4 = STOP
5 = SRB(SPACE REV BLOCK)
6 = WBG(WRITE BLOCK GAP)
7 = WBTG(WRITE BEGIN TAPE GAP)
8 = LPSI(LPS TRACK 1)
9 = UNLD REF
A = GFR(GO FAST REV) 1390
B = GFF(GO FAST FWD)
C = LPS2(LPS TRACK 2)
D = SFB(SPACE FWD BLOCK)
E = N/U
F = TTS(TEST TAPE SAFE)

RANK STRAND ELECTRIC
A DIVISION OF
RANK AUDIO VISUAL LIMITED

DIMENSIONS IN INCHES/MILLIMETRES
THIRD ANGLE PROJECTION

TOLERANCES
IMPERIAL
FRACTION ± 1/64"
DECIMAL ± .005 | 2 DEC PLACE ± 0.4mm | 1 DEC PLACE ± 0.1mm
ANGULAR ± 0.25°
METRIC
UNLESS OTHERWISE STATED

USED ON

FINISH

SCALE
DRAWN
CHECKED
APPROVED
MATERIAL -

DATE
31.12.75
16.1.76
16.1.76

TITLE
MMS TAPE
MC PERIPHERAL ADDRESS LIST

ISSUE A

DWG. N° IM16641

FIG. R15.