SELECON
PRODUCT DATA SHEET

ARENA

THEATRE FRESNEL

The Arena Theatre Fresnel is 2.0 / 2.5 kw luminaire using a 200mm diameter lens. The adjustable cone of light has a soft edge, easily blended with adjacent beams to provide even illumination. Fully featured luminaire constructed of pressure die-castings and aluminium extrusion. The Arena Theatre Fresnel offers superior light output, strength and performance at a moderate cost.

FEATURES

- Wide range of beam angle from 7 to 60 degrees.
- Flat even beam with very little spill.
- Adjustable yoke balance point.
- 'Swing-down' door for easy access to lamp or cleaning. Isolates the mains supply when opened.
- Choice of GY16 base for CP72 2.0kw lamp or G22 base for CP 91, 2.5kw or CP 92, 2.0kw lamp.
- Smooth focus movement from 'Posi-slide' focus system, no metal to metal contact.
- Effective airflow maintains lower body temperature.
- Fully tested and compliant to CE standards.

PHOTOMETRIC DATA

Tests conducted using a standard CP91, 2500w, 240v, 67,500 lumens lamp.

Beam angles:

Spot 7◦	338,400 cd	Flood 60◦	34,560cd
Field:	22◦		70◦

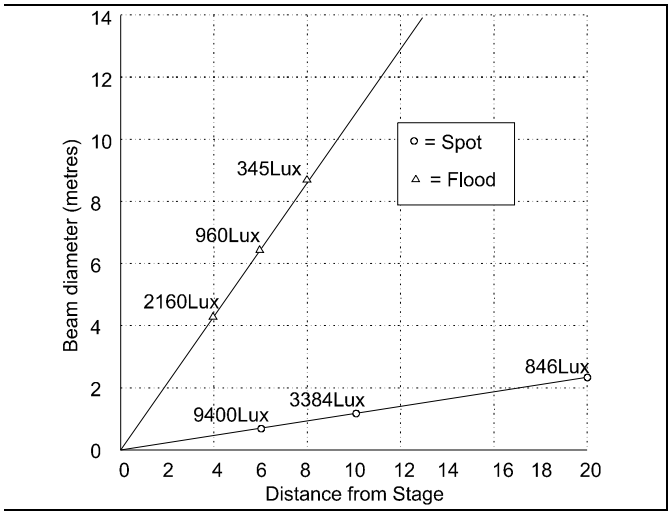

PHYSICAL DATA

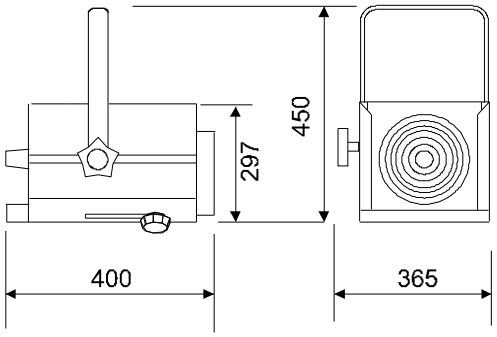

Weight: 8.7 Kg
Packed Weight: 11.0Kg
Carton Size: 310 x 375 x 520
Carton Size Cubic: 0.06

Colour Frame Size: 245mm x 245mm (DIN Std)

Included: 1 x colour frame, 1 x M12 nut & bolt set, instruction sheet

ORDER CODES & ACCESSORIES

Arena Th. Fresnel - GY16 base	10SF200/200
Arena Th.Fresnel - G22 base	10SF250/200
Barndoor	20BDSF2020
Lens Safety Mesh	20SM20
Suspension Hookclamp	20HC
Safety Bond	20SC

Your Selecon Distributor

Selecon reserves the right to change the specifications without notice (04/97)